The International Axion Observatory (IAXO)

9th International Conference "Identification of Dark Matter 2012"

23-27 July 2012, Chicago, IL, USA

Julia K. Vogel
Lawrence Livermore National Laboratory
On behalf of the IAXO collaboration

Lawrence Livermore National Laboratory

LLNL-PRES-566177
This work was performed under the auspices of the U.S. Department of Energy by Lawrence Livermore National Laboratory under Contract DE-AC52-07NA27344. Lawrence Livermore National Security, LLC

Overview

- Solar Axion Searches
- The International Axion Observatory (IAXO)
  - Magnet
  - X-ray optics for IAXO
  - Low-background detectors for IAXO
  - Prototype Testing
- IAXO Prospects
  - Sensitivity Prospects
  - Collaboration and Schedule
- Conclusions

Irastorza et al. JCAP 06 (2011) 013

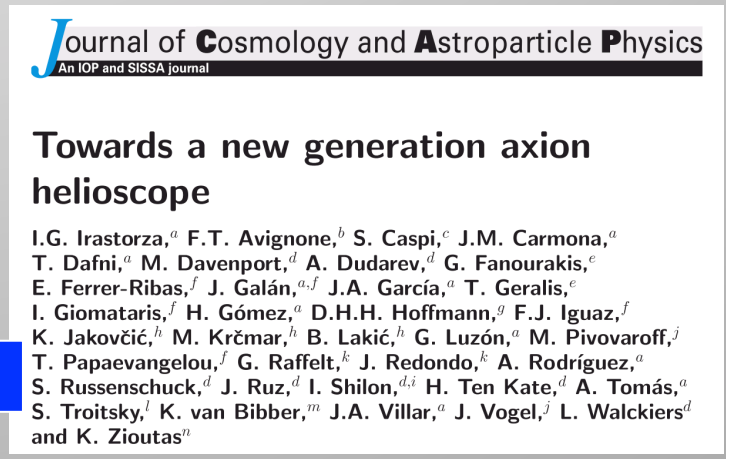

Solar Axion Searches

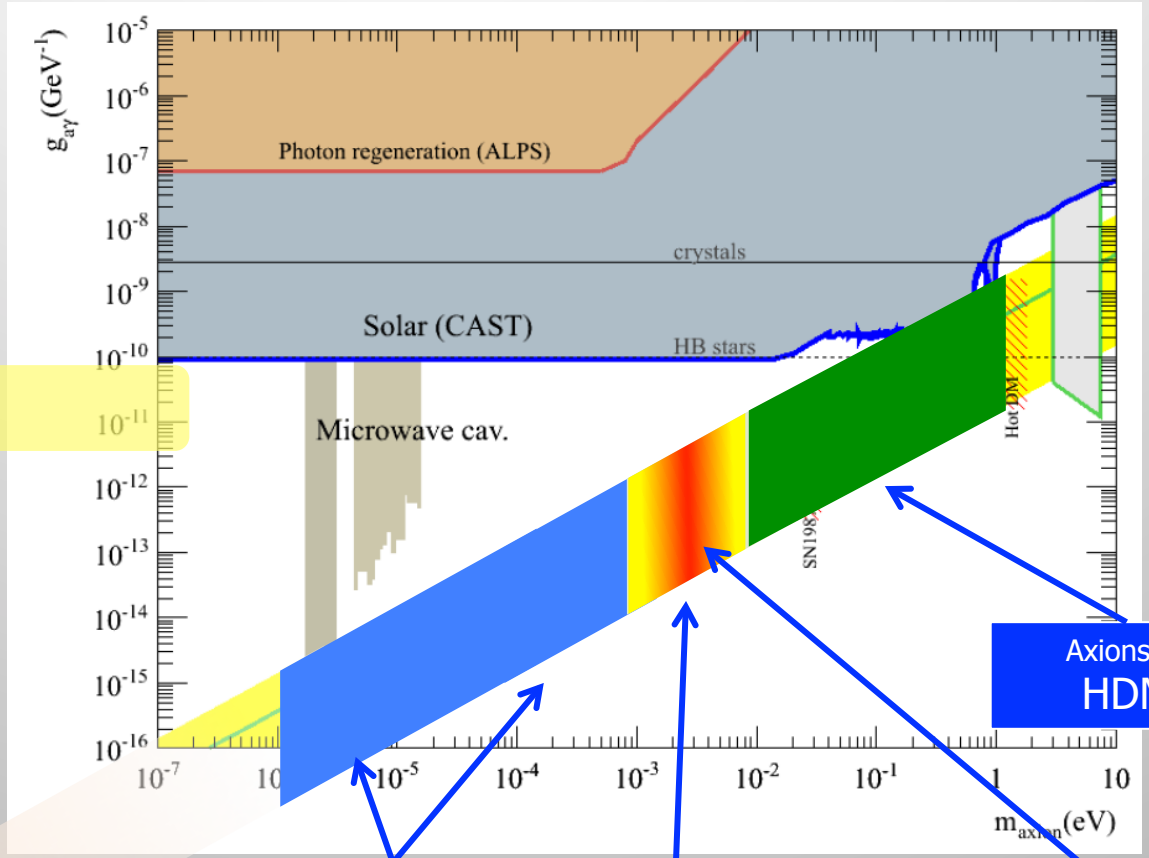

Astrophysical hints for ALPs

CDM
"anthropic window"

CDM
"classical window"
Vacuum mis. + defects

CDM
Defects dominate
hep-ph/1202-5851

White Dwarfs

Axions as HDM

IAXO – The new generation helioscope

→ 1st generation: Brookhaven Experiment
→ 2nd generation: Tokyo Helioscope
→ 3rd generation: CAST

- **IAXO = 4th generation axion helioscope**
- Based on the more than a decade CAST experience!!
- CAST is established as a reference result in experimental axion physics
- No other technique can realistically improve CAST in such a wide mass range.
- No miracle needed!
  IAXO builds on CAST innovations to improve the helioscope technique…

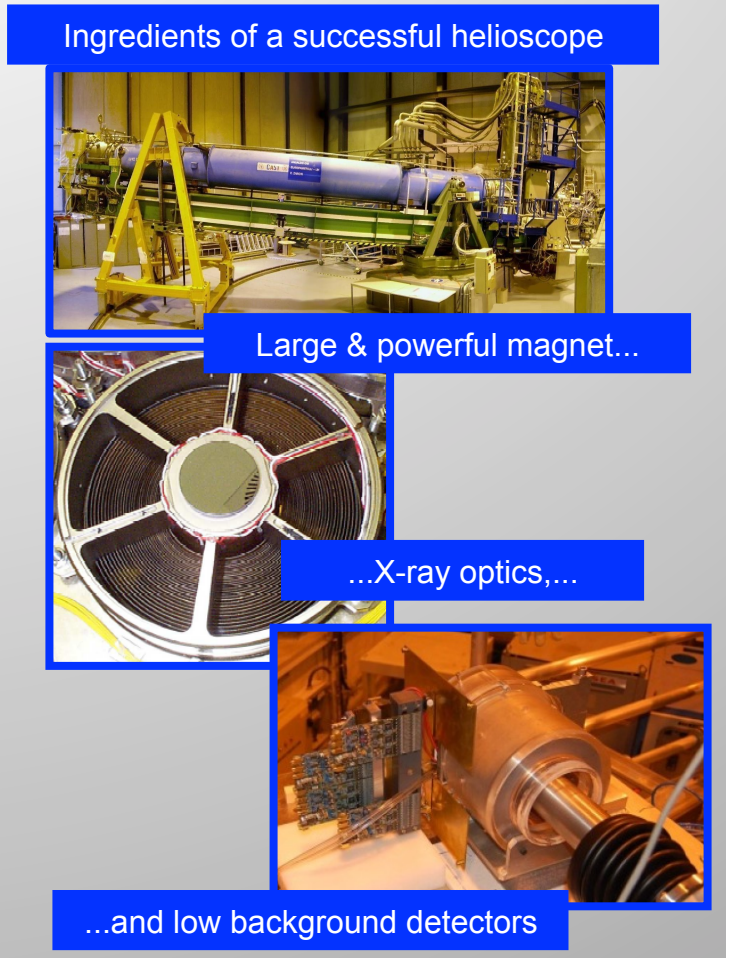

IAXO – How to improve sensitivity

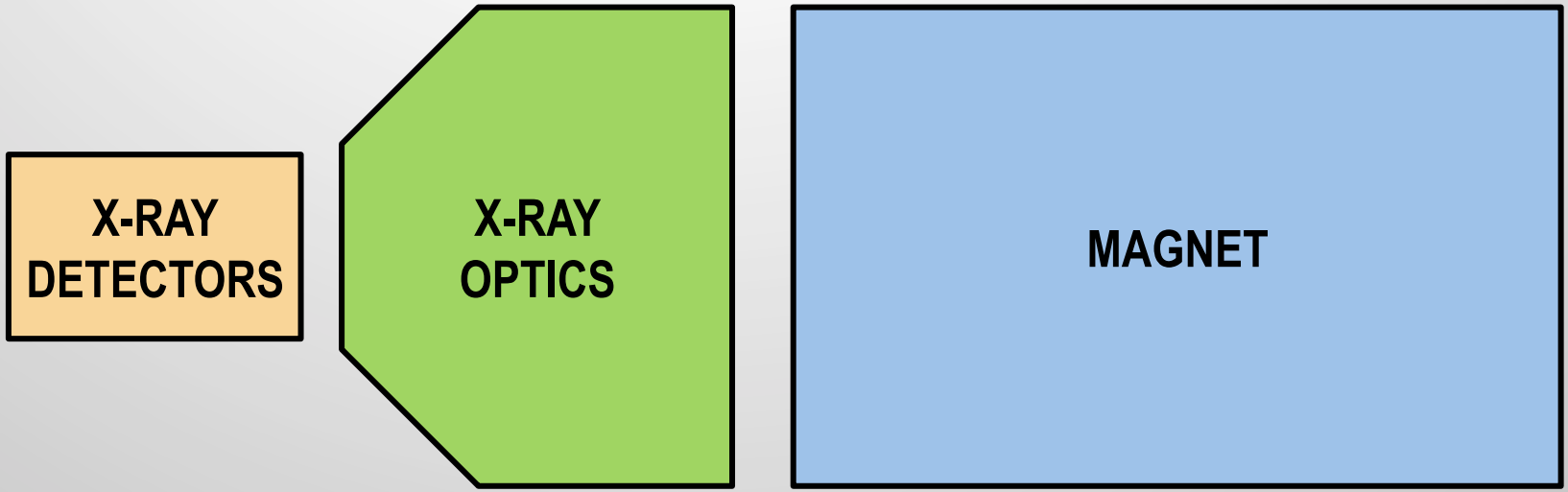

$$g_{a\gamma}^4 \propto \underbrace{b^{1/2}\varepsilon^{-1}}_{\textit{detectors}} \times \underbrace{s^{1/2}\varepsilon_0^{-1}}_{\textit{optics}} \times \underbrace{(BL)^{-2}A^{-1}}_{\textit{magnet}} \times \underbrace{t^{-1/2}}_{\textit{exposure}}$$

b = background
ε = efficiency

s = spot size
ε_0= efficiency

B = magnetic field
L = magnet length
A = cross-sectional area

t = time

IAXO – How to improve sensitivity

Parameter	Unit	CAST-I	Scenario 1	Scenario 2	Scenario 3	Scenario 4
B	T	9	3	3	4	5
L	m	9.26	12	15	15	20
A	m^2	2×0.0015	1.7	2.6	2.6	4.0
f_M^*		1	100	260	450	1900
b	$\frac{10^{-5}\,c}{keV\,cm^2\,s}$	~ 4	3×10^{-2}	10^{-2}	3×10^{-3}	10^{-3}
ϵ_d		0.5–0.9	0.7	0.7	0.7	0.7
ϵ_o		0.3	0.3	0.3	0.6	0.6
a	cm^2	0.15	3	2	1	1
f_{DO}^*		1	6	14	40	40
ϵ_t		0.12	0.3	0.3	0.5	0.5
t	year	~ 1	3	3	3	3
f_T^*		1	2.7	2.7	3.5	3.5
f^*		1	1.6×10^3	9.8×10^3	6.3×10^4	2.7×10^5

IAXO – The new generation helioscope

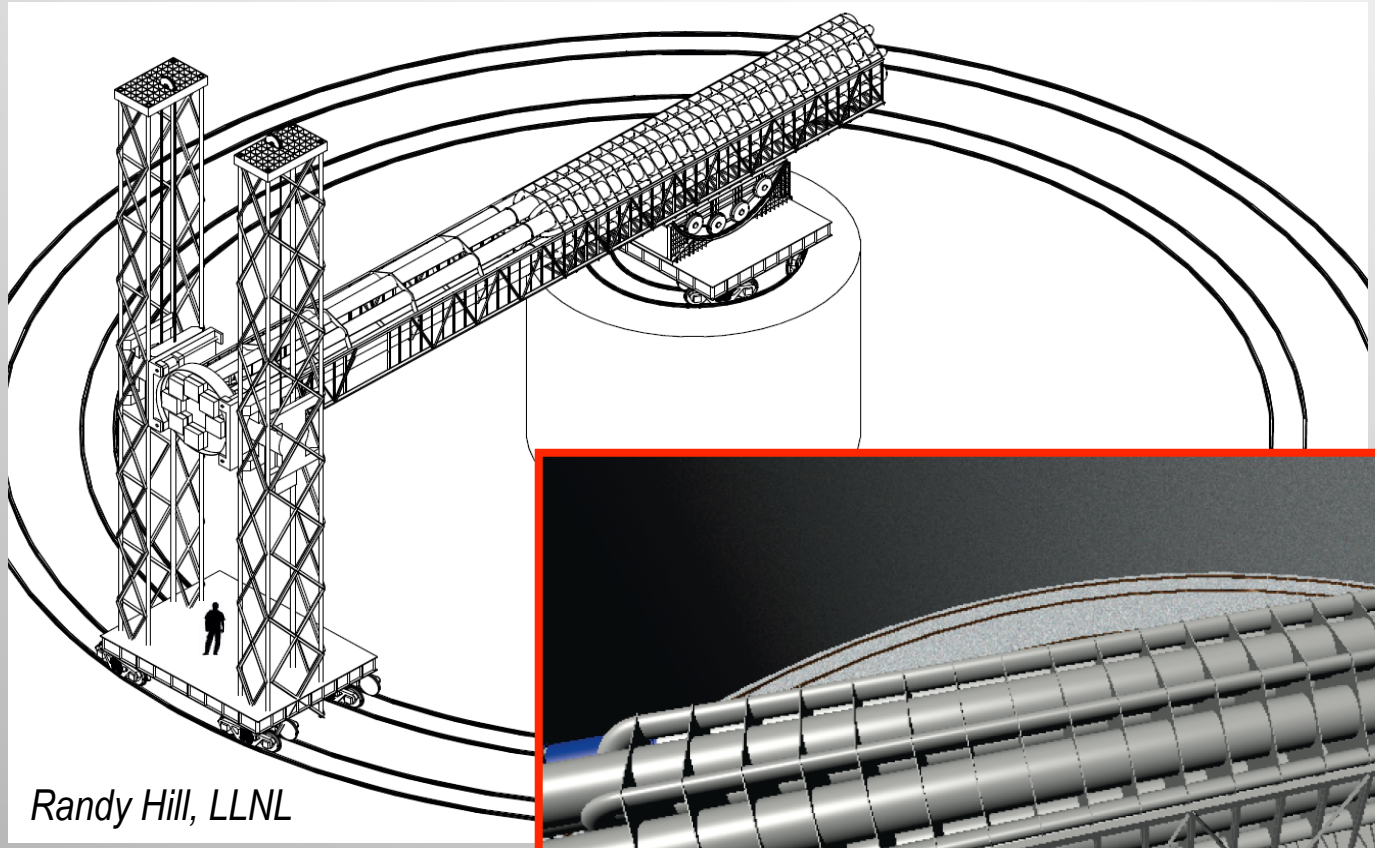

Randy Hill, LLNL

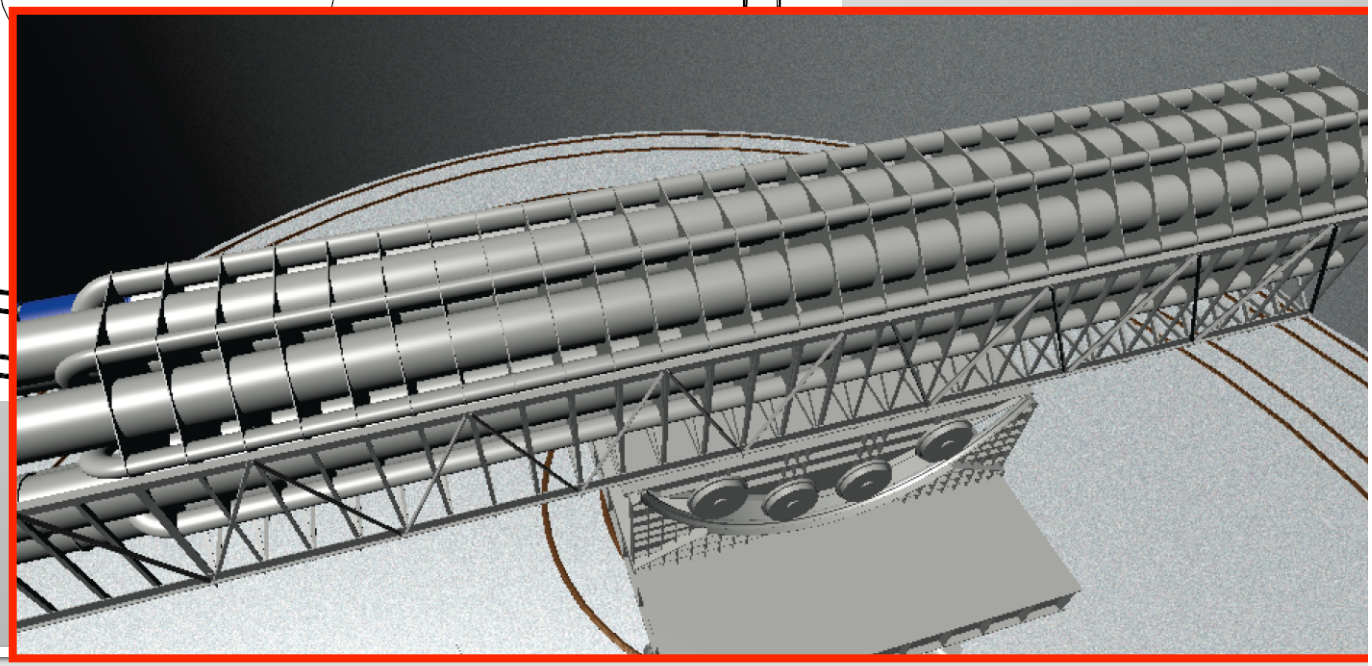

IAXO – The new generation helioscope

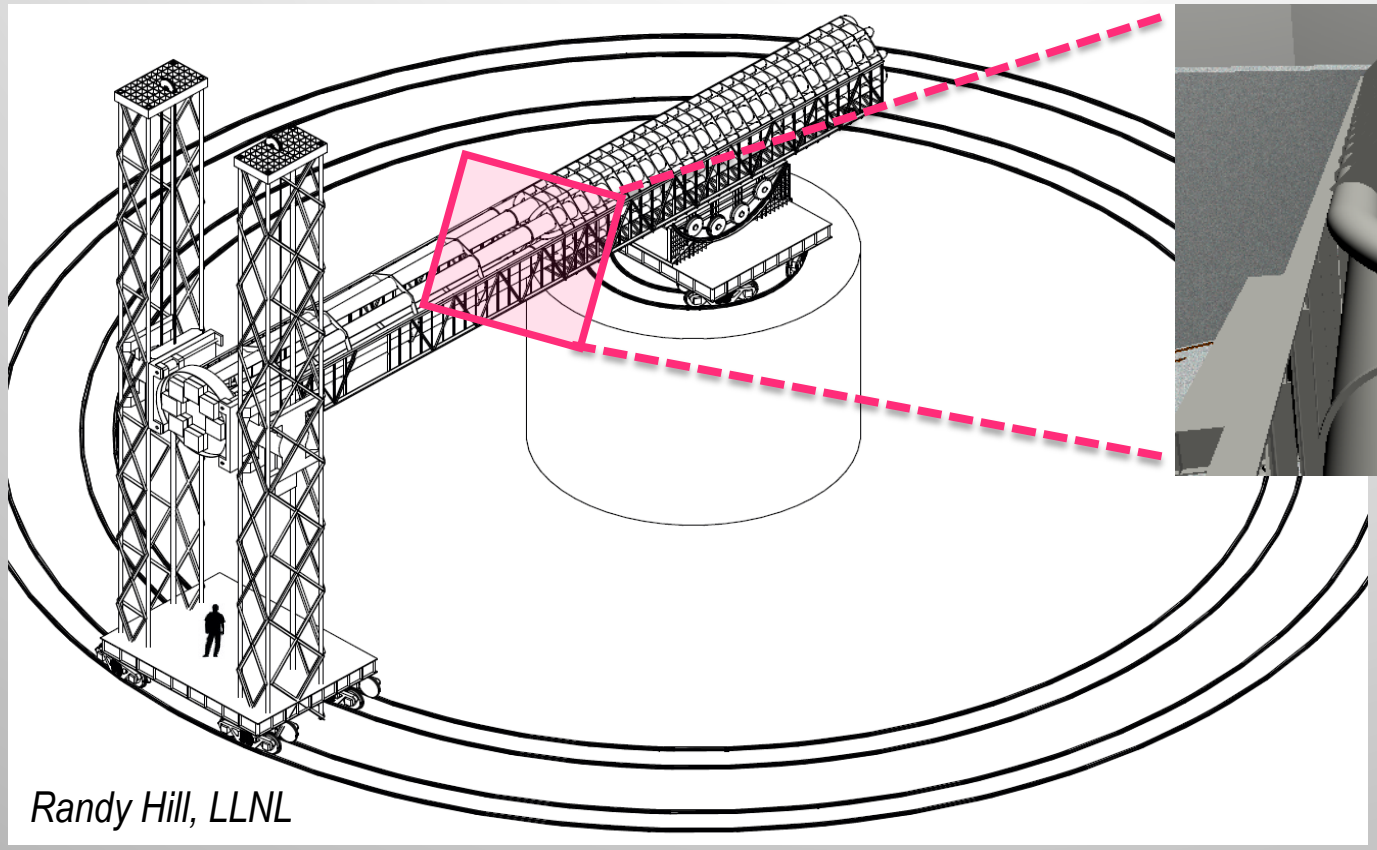

Randy Hill, LLNL

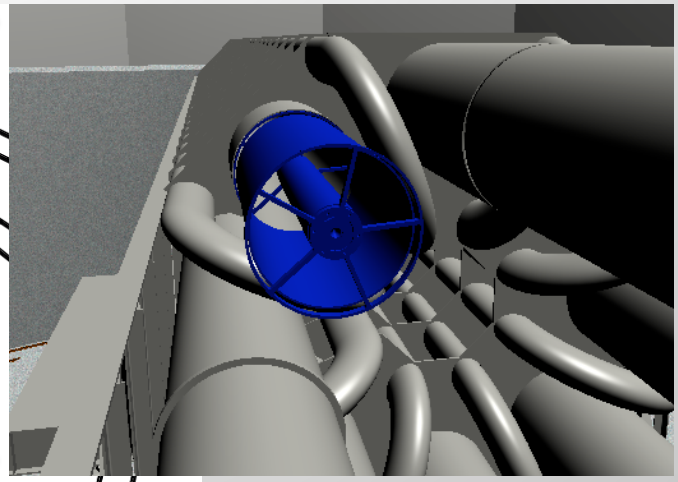

IAXO – The new generation helioscope

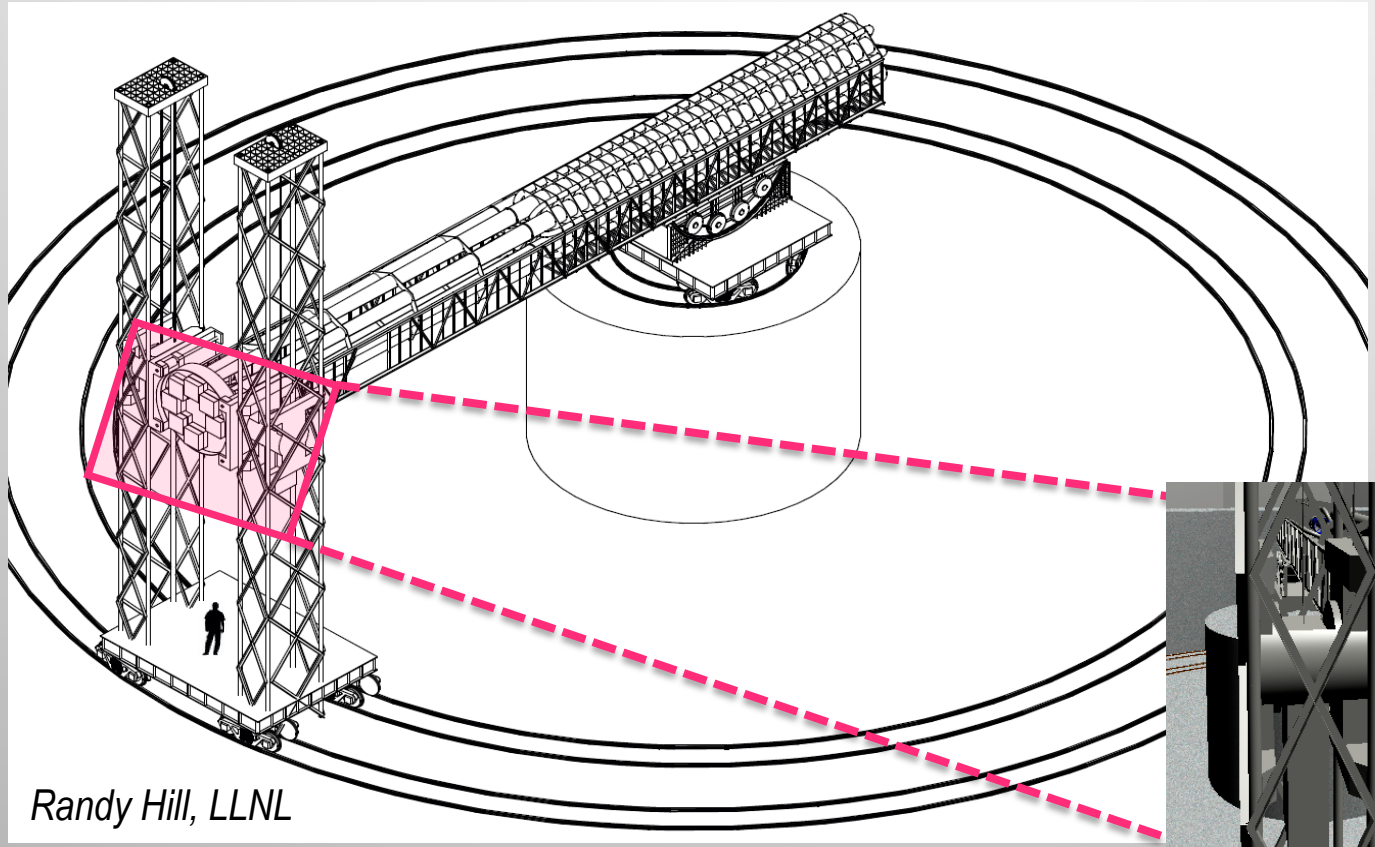

Randy Hill, LLNL

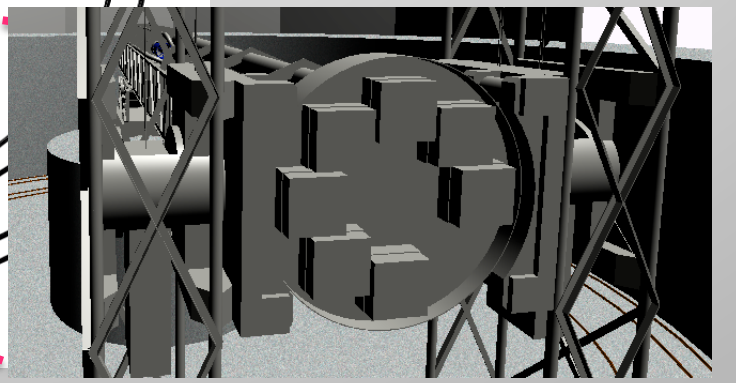

Magnet for IAXO

- CAST has one of the best existing magnets than one can “recycle” for axion physics (LHC test magnet)
- Only way to make a step further is to build a new magnet, specifically for axions
- Work ongoing, but best option up to now seems to be a **toroidal configuration** (similar to ATLAS):
  - Much bigger aperture than CAST: ~0.5-1 m per bore
  - Relatively light (no iron yoke)
  - Bores possibly at room temperature

→ **A magnet that looks like a detector magnet with the behavior of an accelerator magnet (little stress, strong field,…)**

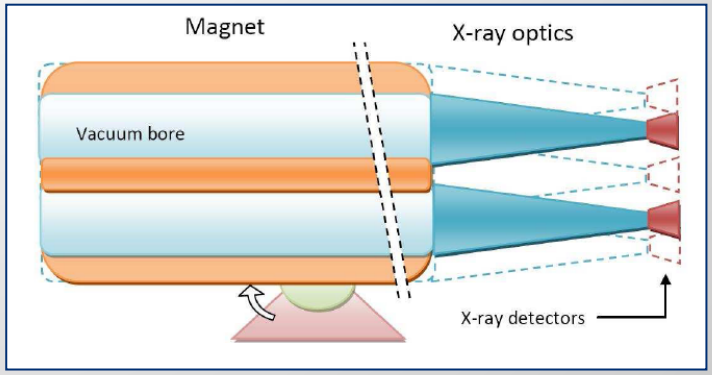

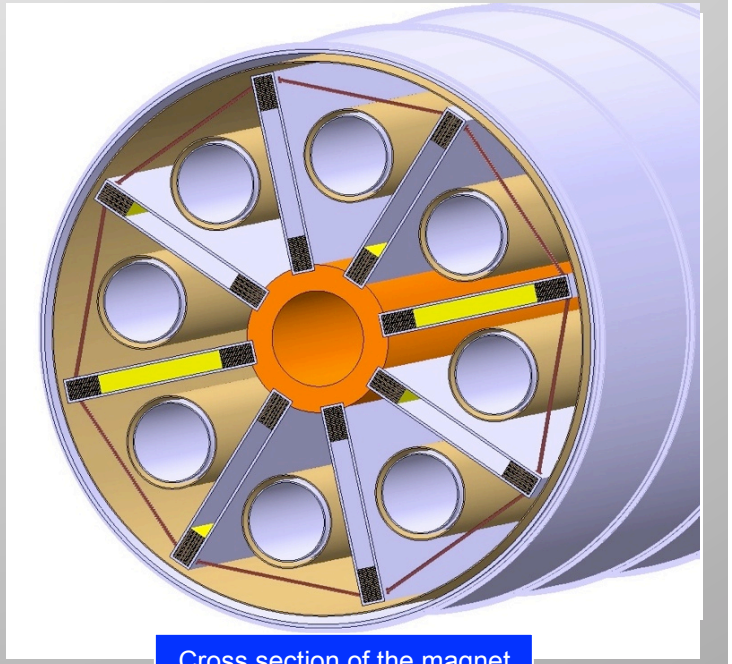

Cross section of the magnet

Magnet for IAXO

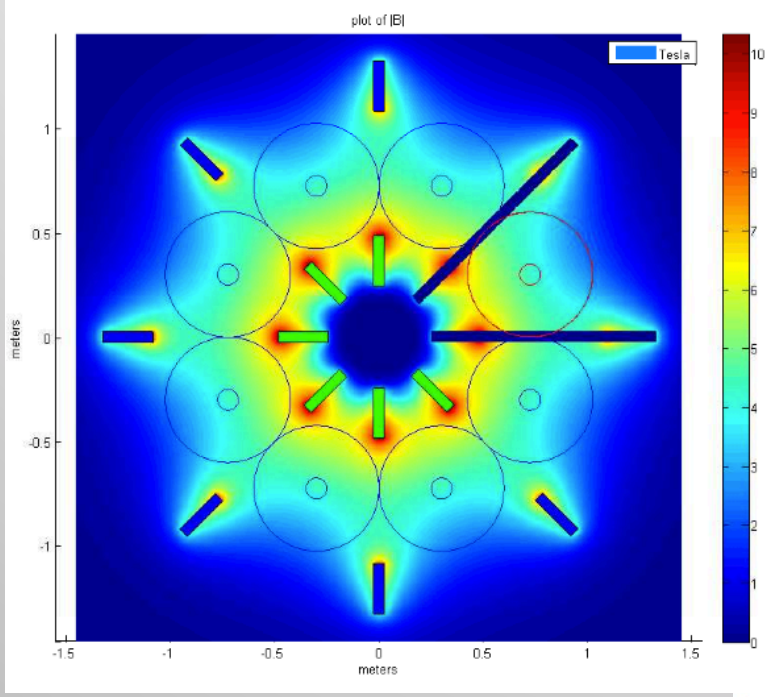

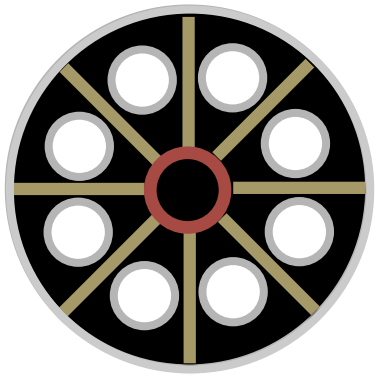

Total Radius	= 2 m
Bore diameter	= 600 mm
Number of bores	= 8
Peak field	= 6 T
Stored Energy	= 500 MJ
MFOM	= 300

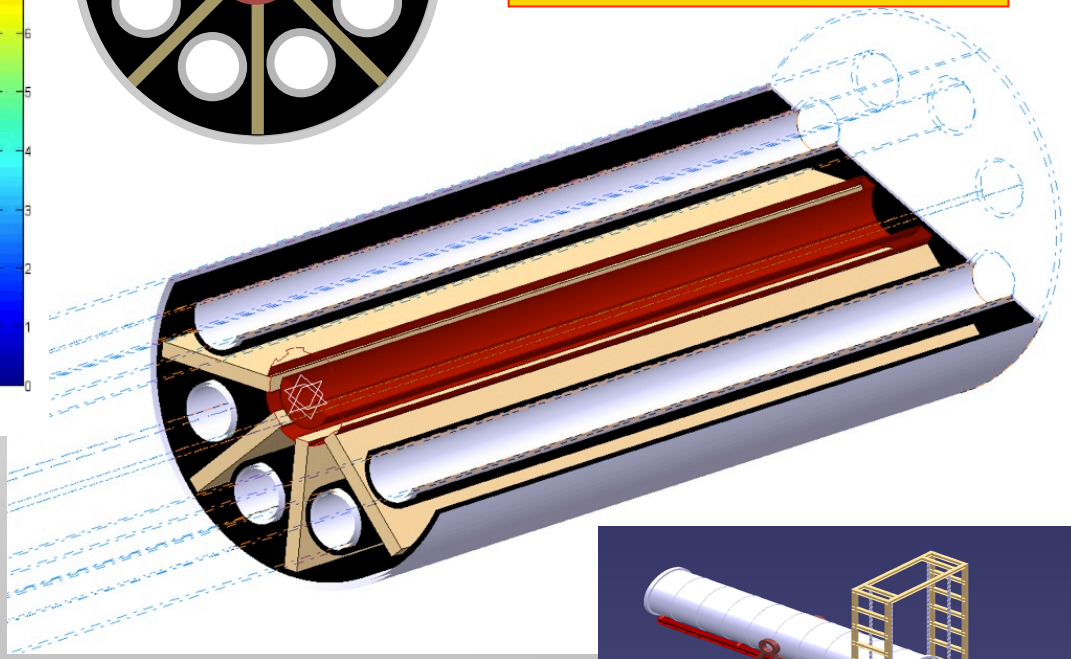

- Current IAXO design favors bores between coils
  - FOM
  - More flexibility
- Scenario 2 conservative, better than scenario 3 is possible
  → Work on further optimization ongoing

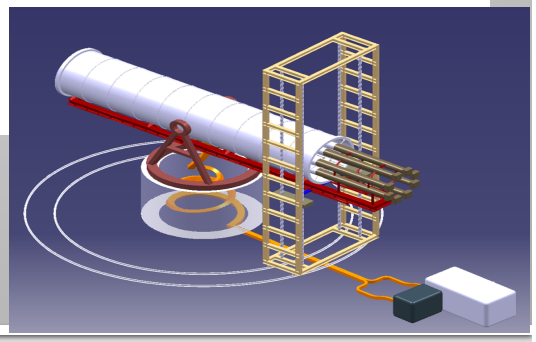

X-ray Optics

- X-ray community put lots of money and effort into development of reflective x-ray optics:
  - HighTech, expensive, unique
  - Excellent imaging capabilities
- Innovations include:
  - Nested designs (i.e. Wolter telescopes)
  - Low-cost substrates
  - Highly reflective coatings
- IAXO optics requirements:
  - Exquisite imaging not needed
  - Need to cover large area:
    → IAXO requires dedicated but cost-effective optics
  - Good throughput (0.3 – 0.5)
  - Small focal point (~1 cm^2)

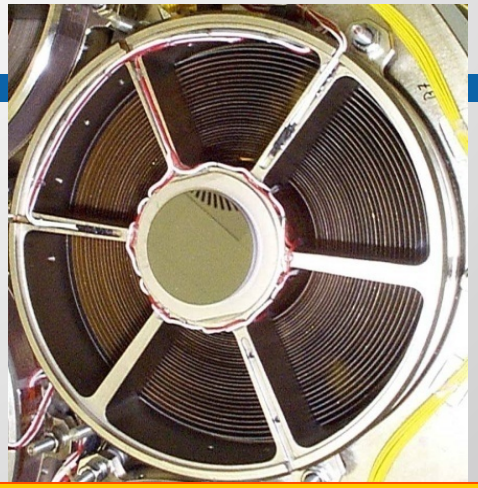

ABRIXAS flight-spare telescope

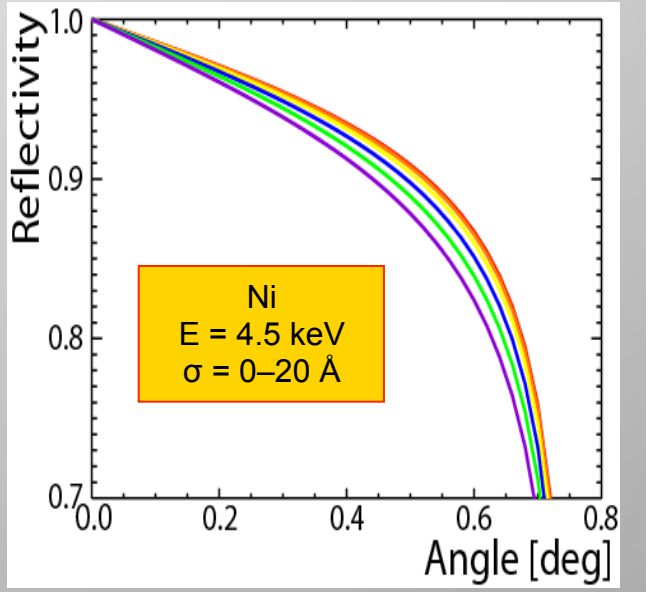

X-ray Optics

- **Most favored IAXO solution:**
  thermally-formed glass substrates optics
  - Successfully used for NuSTAR
  - Leverage of existing infrastructure
    → Minimize costs & risks
  - Allows for optimization of the reflective coating (multilayers or thin metal films) of each layer
- **NuSTAR launched 13 June 2012**
  - Specialized tooling to mirror production and telescope assembly now available
  - Hardware can be easily configured to make optics with a variety of designs and sizes
- Key institutes of NuSTAR optics team
  Columbia, DTU Space, LLNL → **All in IAXO!**

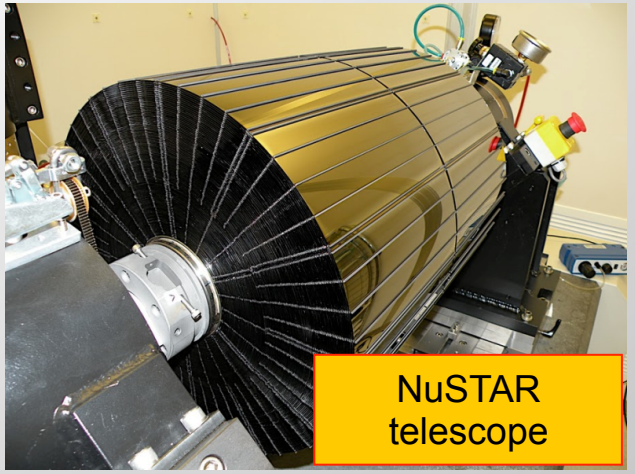

NuSTAR telescope

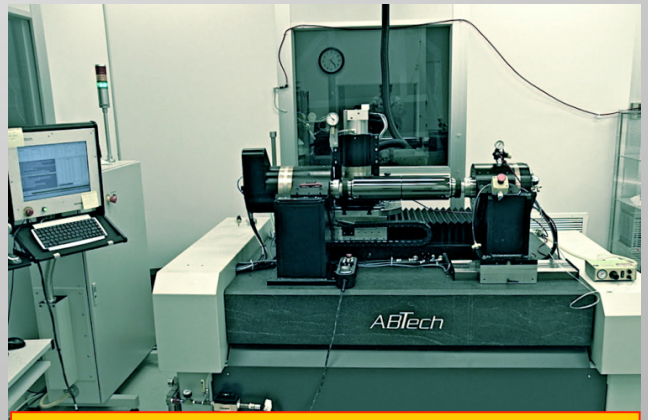

NuSTAR optics assembly machine

J Koglin *et al.*, *Proc SPIE*, **8147,** (2011)
W Craig *et al.*, *Proc SPIE*, **8147,** (2011)

Low-background detectors

- **Goal**
  - Micromegas detectors with at least 10^{-7} cts/(keV×cm^2×s)
  - If possible go down to 10^{-8} cts/(keV×cm^2×s)

- **Work ongoing**
  - Experimental tests with current micromegas detectors at CERN, Saclay & Zaragoza
  - Underground setup at Canfranc
  - Simulation works to build up a background model
  - Design a new detector with improvements implemented

Simulations

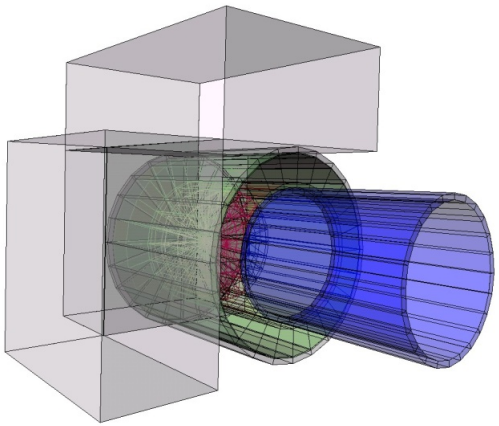

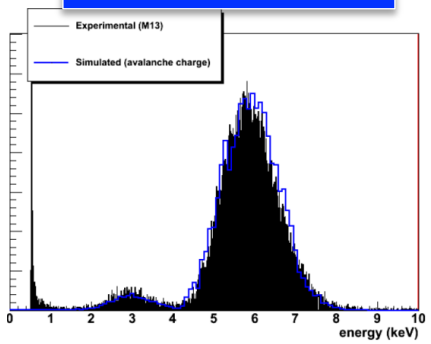

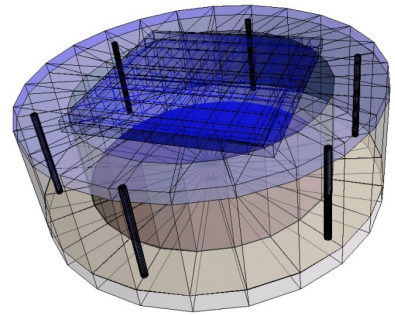

Shielding

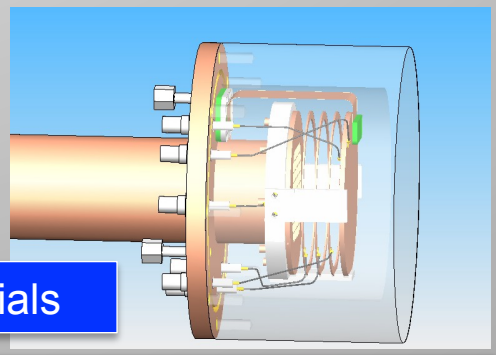

Radiopure materials

Low-background detectors

History of background improvement of Micromegas detectors at CAST

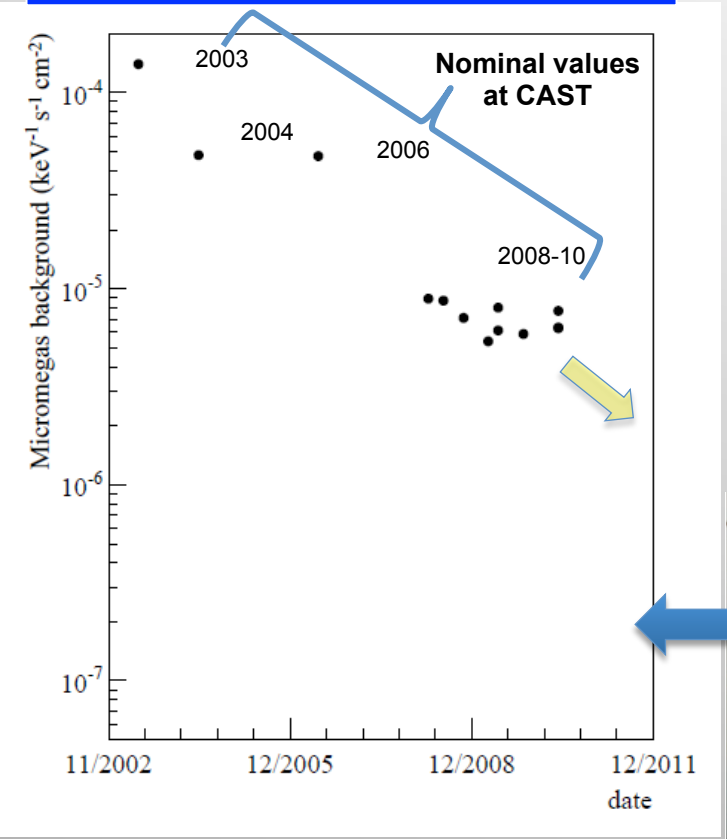

- Latest Micromegas:
  Background improved by factor 20
  - Shielding
  - Radiopurity & new manufacturing technique (microbulk readouts)
  - More powerful offline cuts
- Tests in controlled conditions underground at Canfranc:
  - Better shielding coverage
  - Thicker shielding

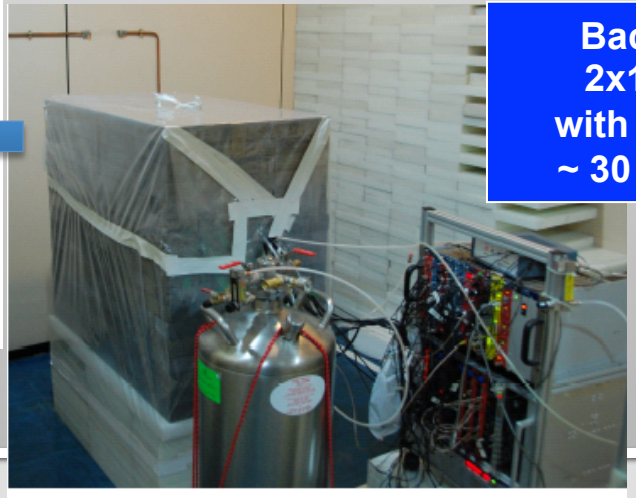

Backgrounds around 2x10-7 cts/keV/s/cm^2 with improved shielding ~ 30 × better than CAST

Recent upgrade of shielding at CAST improves background further towards IAXO!

Pathfinder detector+optics for IAXO

- Small x-ray optics
  - Fabricated purposely using thermally-formed glass substrates (NuSTAR-like)
- Micromegas low background detector:
  - Apply lessons learned from R&D: compactness, better shielding, radiopurity,…
  - Aim for background of 10^{-7} cts/(keV×cm^2×s) or lower
- Collaboration of key groups: Saclay, Zaragoza, LLNL, DTU, Columbia

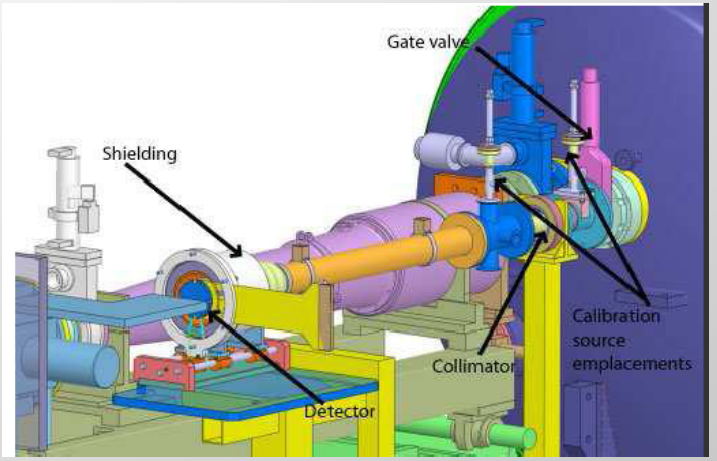

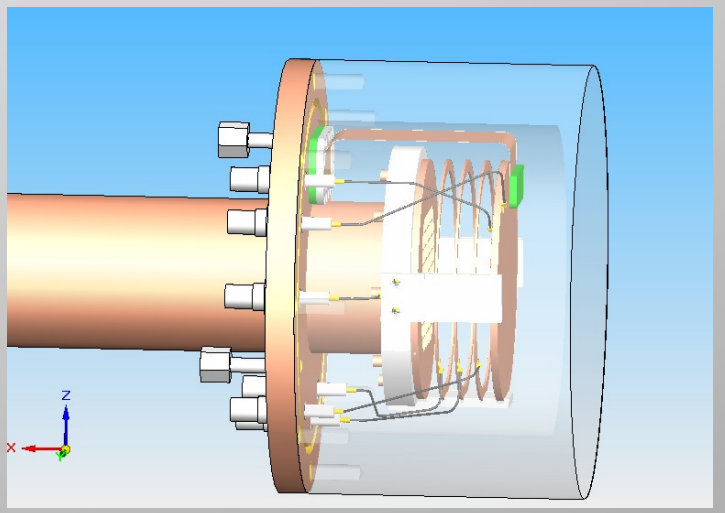

➡ Operation at CAST in 2013

➡ Tests of techniques and acquisition of know-how for IAXO

IAXO sensitivity prospects

- **Hadronic axion models**
  - Improvements of **factor 8-30** in $g_{a\gamma}$ (4×10^3-1×10^6 in signal strength!!)
  - QCD axions at masses of ~meV seem out of reach even for an improved axion helioscope...

But…

- **Non-hadronic axion models** provide extra axion emission from the Sun through axion-electron compton and bremsstrahlung processes

IAXO could improve current CAST sensitivity to non-hadronic axions by about 3 orders of magnitude

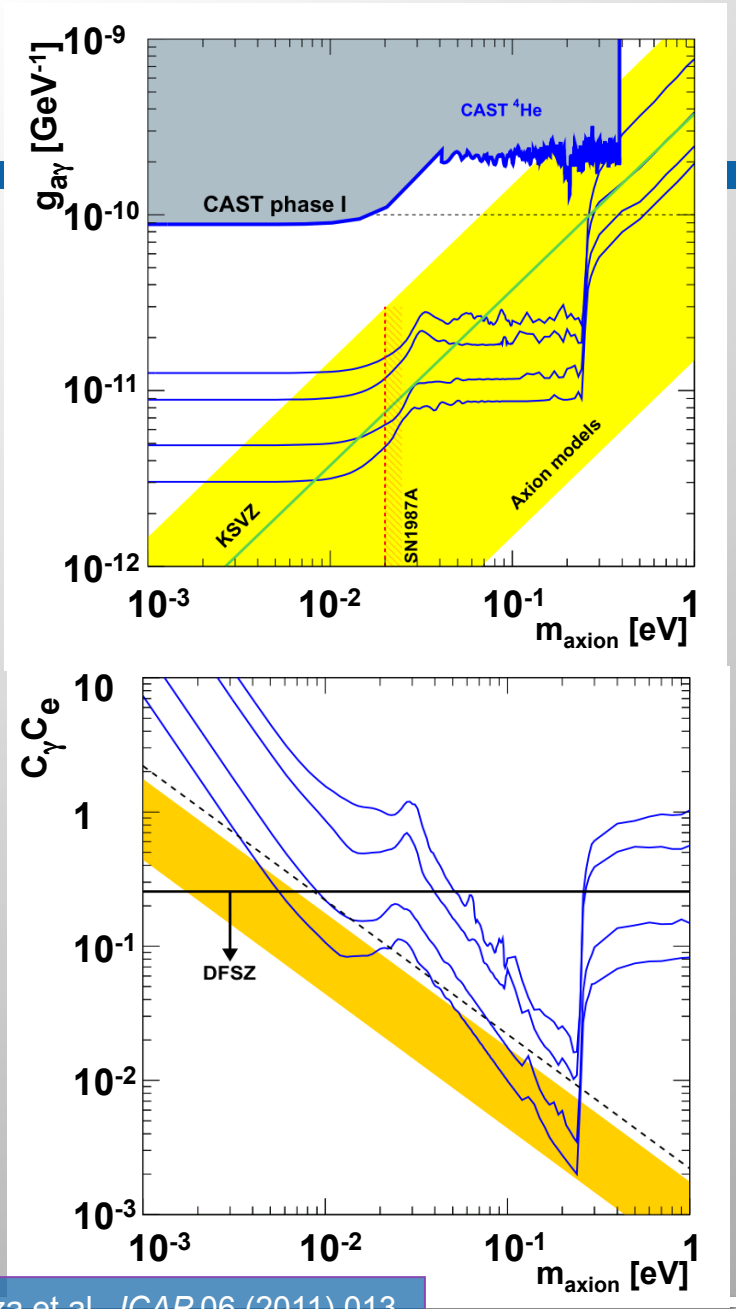

Irastorza et al. *JCAP* 06 (2011) 013

IAXO sensitivity prospects

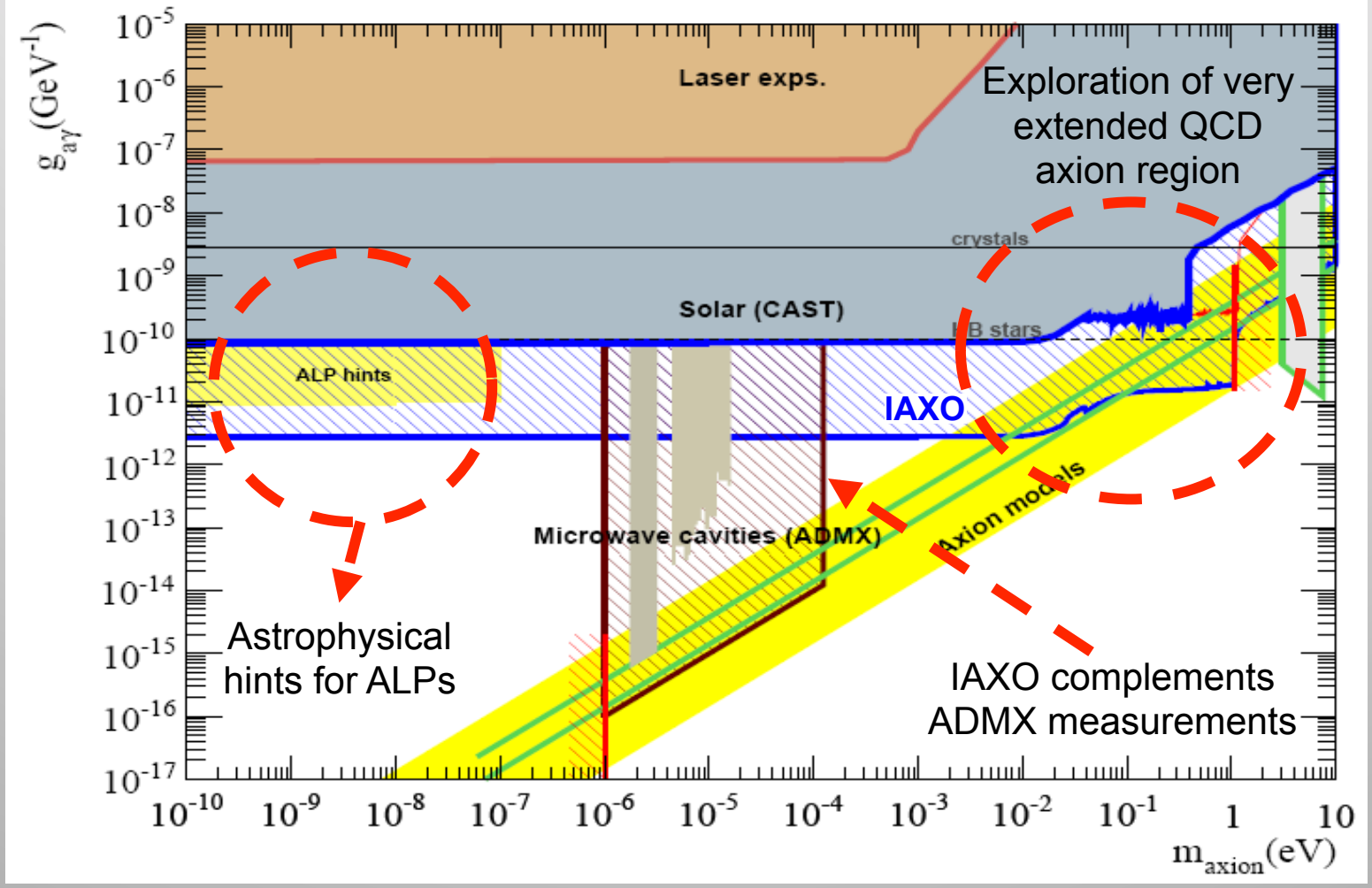

Notional plan

- Proto-collaboration formed
  - Most CAST groups
  - New groups + extended expertise (magnet, optics,…)
  - Open for interested groups
- Conceptual design report in preparation, LoI to be submitted to CERN soon
- 4th generation helioscope supported in latest draft of ASPERA roadmap 2011

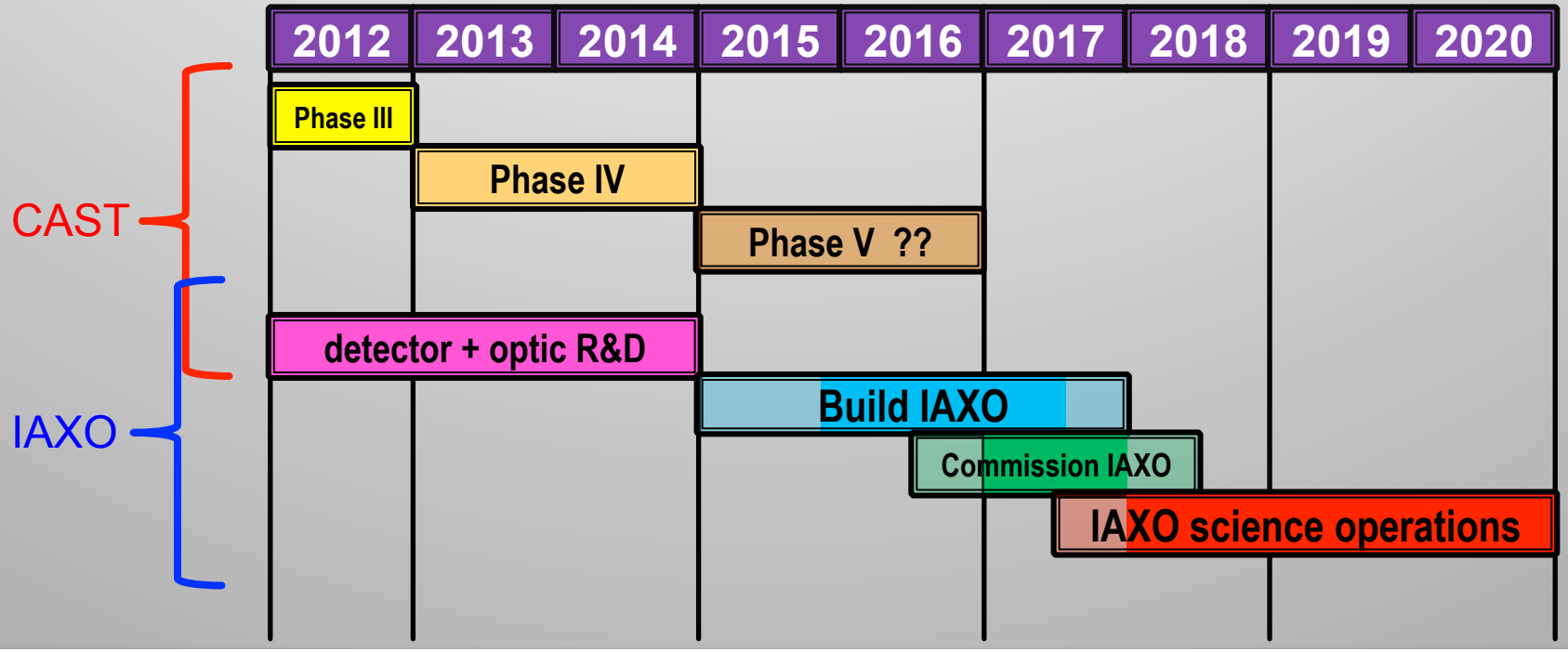

Conclusions

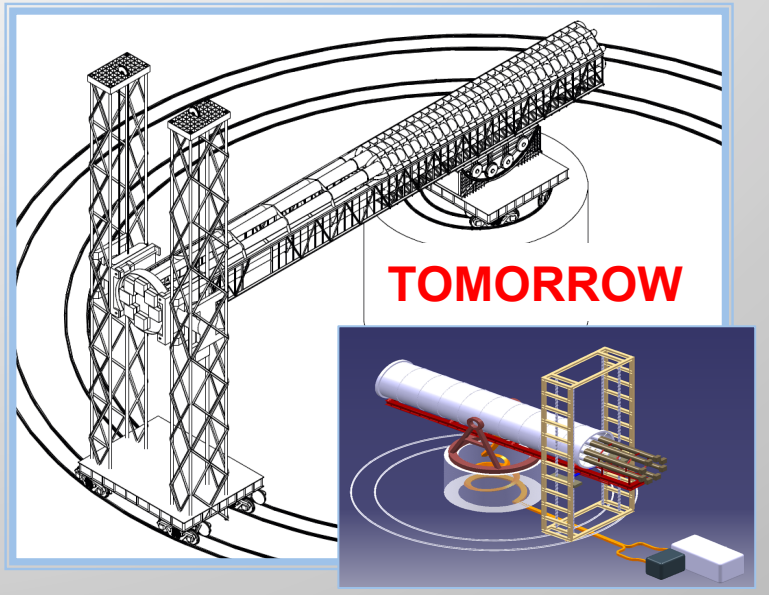

- **CAST** **is established as a reference result in experimental axion physics**
  - CAST PRL2004 most cited experimental paper in axion physics
  - Expertise gathered in magnet, optics, low background detectors, gas systems
  - No other technique can realistically improve CAST in such wide mass range.
- **IAXO** **is the new generation helioscope (4th generation) to search for axions**
  - Good prospects to improve CAST by 1-1.5 orders of magnitude in sensitivity
  - First solid steps towards conceptual design
  - Together IAXO and haloscopes (ADMX) could explore a big part of the QCD axion model region in the next decade
  - Potential for other physics (White Dwarfs, ALPs,…)

Thank you!

Lawrence Livermore
National Laboratory