Light and Charge Yield of Low-Energy Electronic Recoils in Liquid Xenon

Luke Walker Goetzke
Columbia University

LOWECAL Workshop
University of Chicago
September 23, 2015

XENON
Dark Matter Project

COLUMBIA UNIVERSITY
IN THE CITY OF NEW YORK

Energy Scale: Ly and Qy of LXe

Current Status

- Few measurements of light and charge yield of LXe
- Very few measurements of field dependence

Largest systematic uncertainty in:

Aprile *et al.*, Phys. Rev. D 90, 062009 (2014)
Aprile *et al.*, Phys. Rev. Lett. 115, 091302 (2015)
Aprile *et al.*, Science Vol. 349, No. 6250, 851 (2015)

ER relative light yield (Ly)

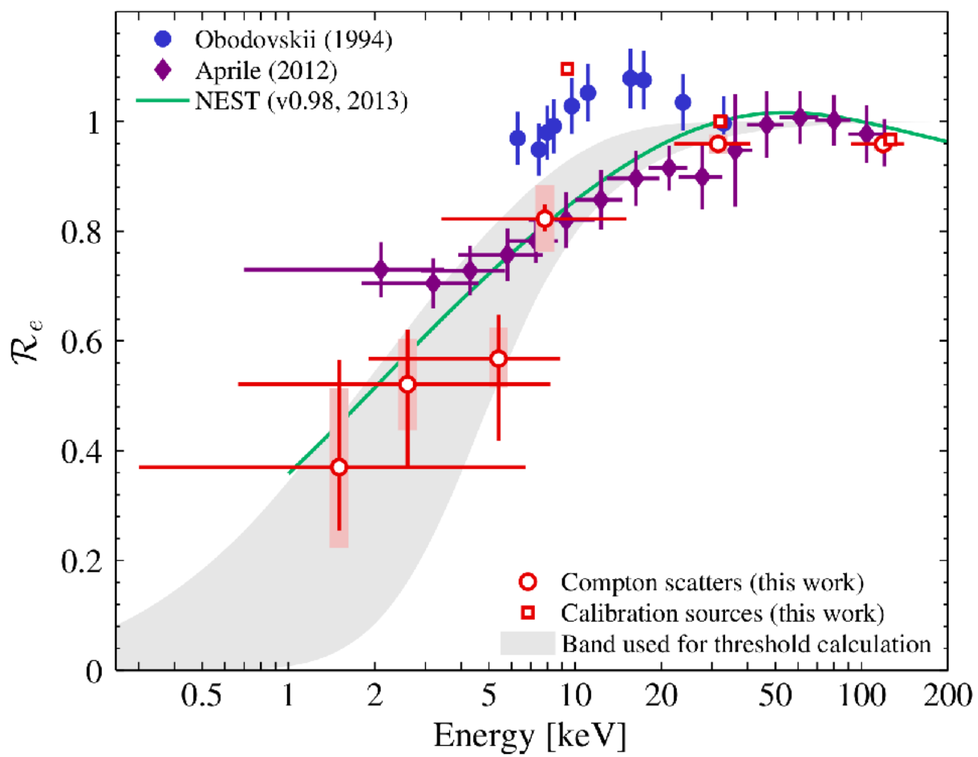

ER charge yield (Qy)

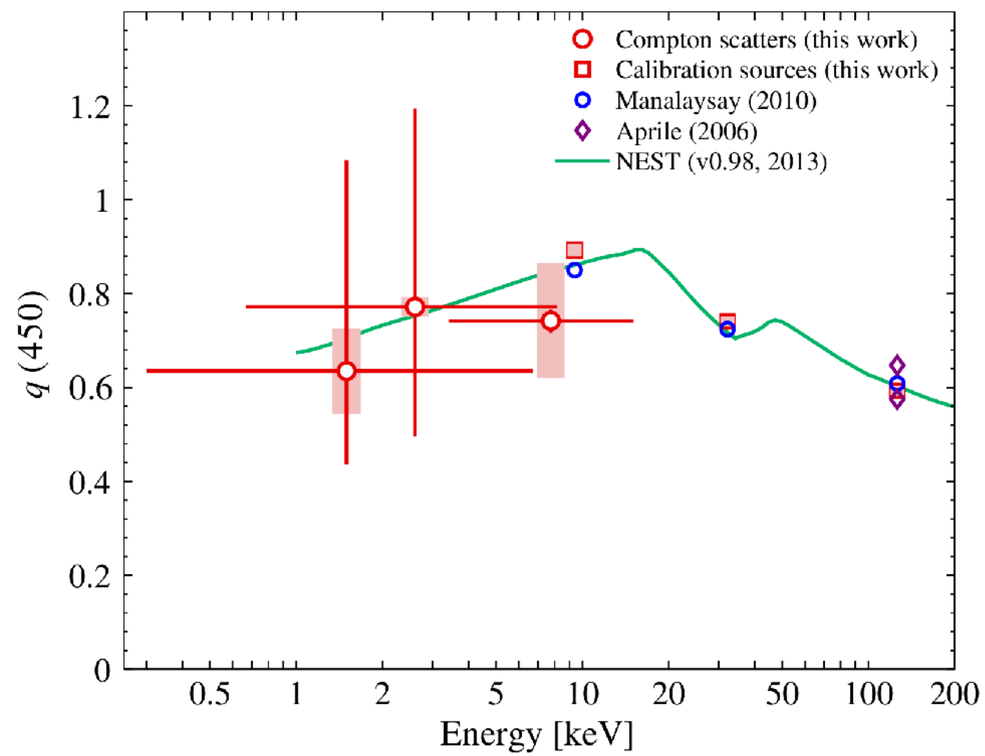

Aprile *et al.*, Phys. Rev. D 86, 112004 (2012)
Baudis *et al.*, Phys. Rev. D 87, 115015 (2013)

neriX detector

nuclear and **e**lectronic **r**ecoils **i**n **X**enon

- 2-phase LXe TPC
- Charge and light from nuclear and electronic recoils down to ~1keV
- Adjustable electric field: ~200–2250 V/cm
- Completed ER measurements

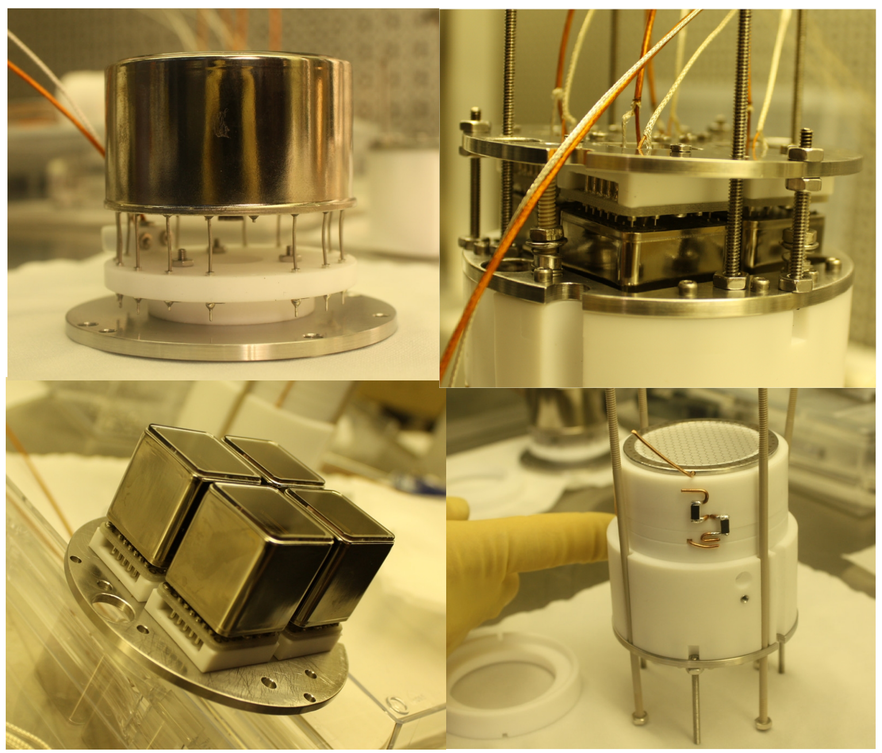

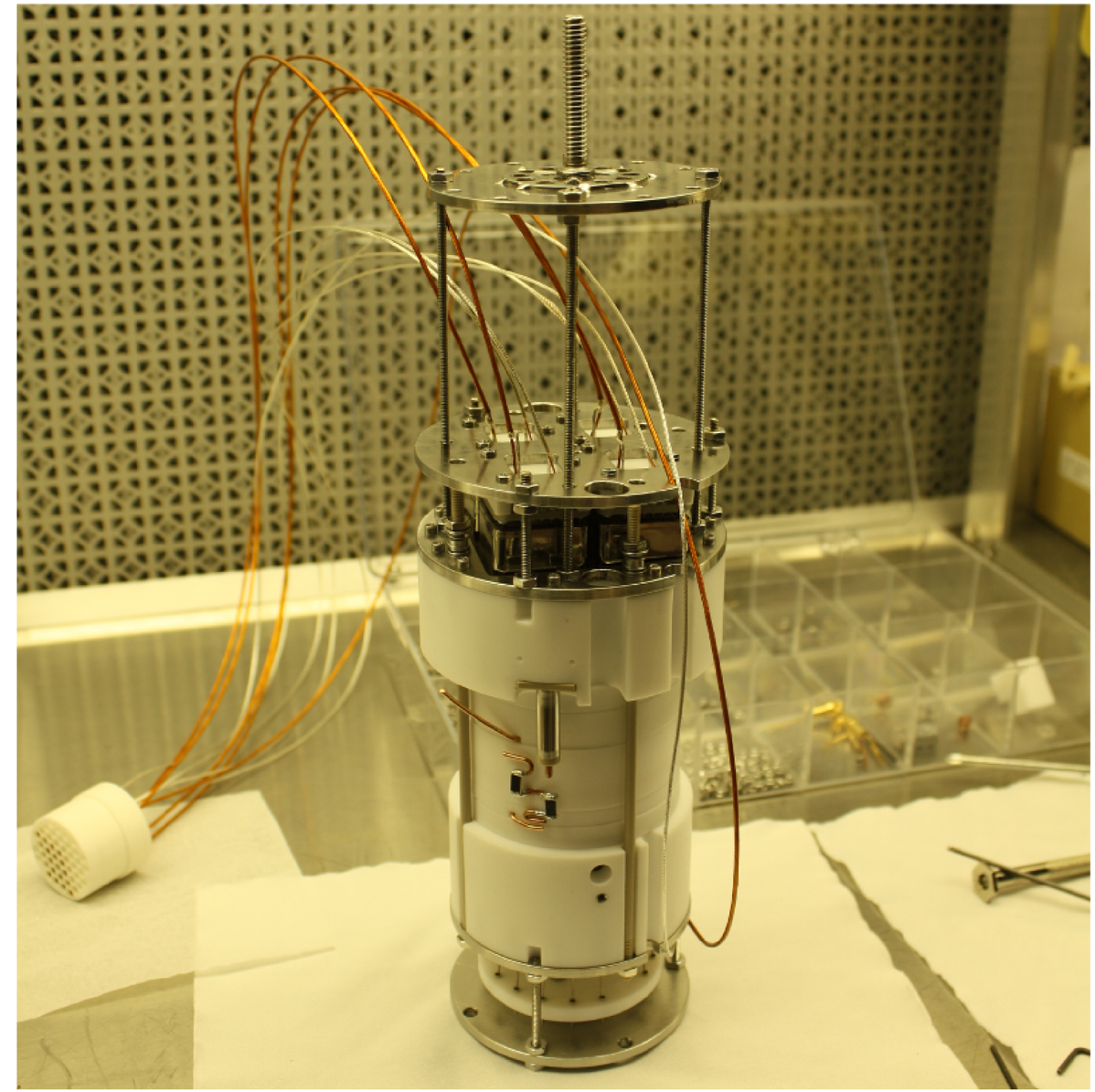

Measurement Method

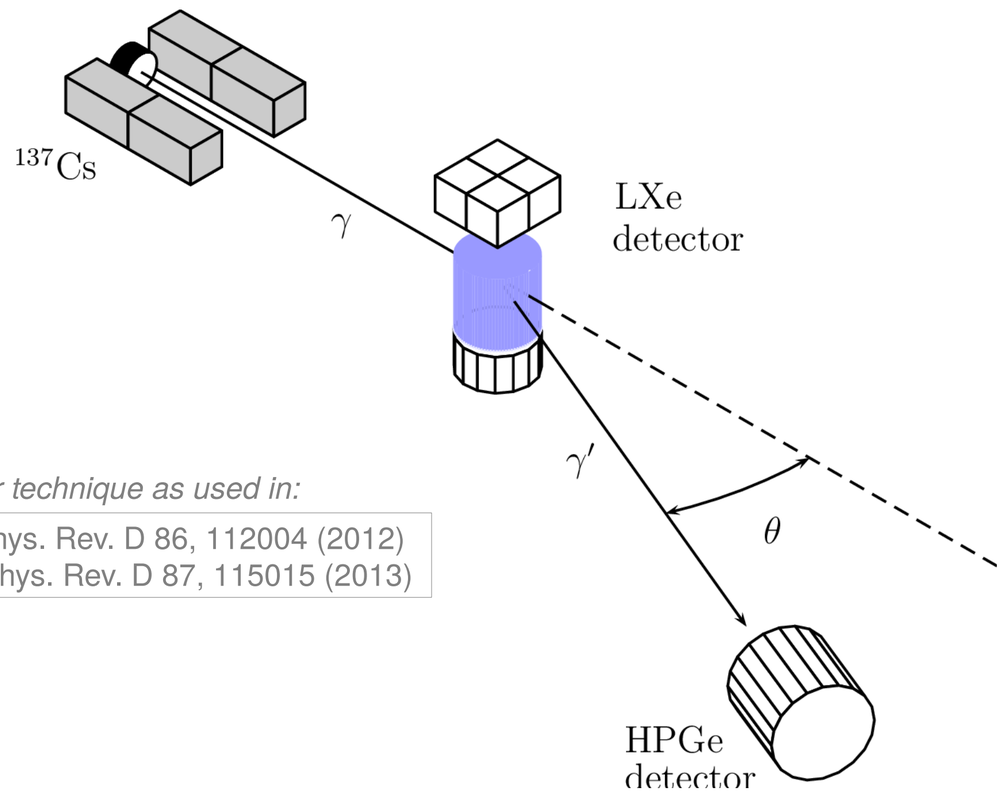

Similar technique as used in:

Aprile *et al*., Phys. Rev. D 86, 112004 (2012)
Baudis *et al*., Phys. Rev. D 87, 115015 (2013)

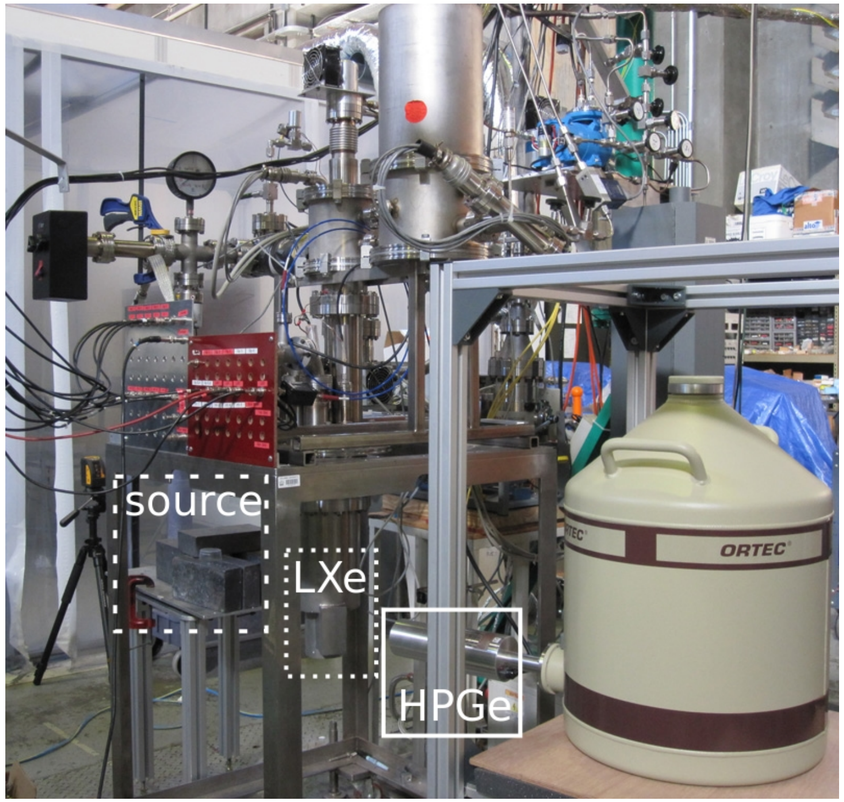

- ERs measured using “Compton coincidence technique"

Rooney and Valentine, IEEE Trans. Nucl. Sci., 43, 1271 (1996)

- γ ray Compton scatters in neriX, depositing $E_r = E_\gamma - \frac{E_\gamma}{1+\frac{E_\gamma}{m_e}(1-\cos\theta)}$
- HPGe far detector measures energy of outgoing γ ray with good resolution (1σ=0.6keV @ 662keV)

Measurement Method

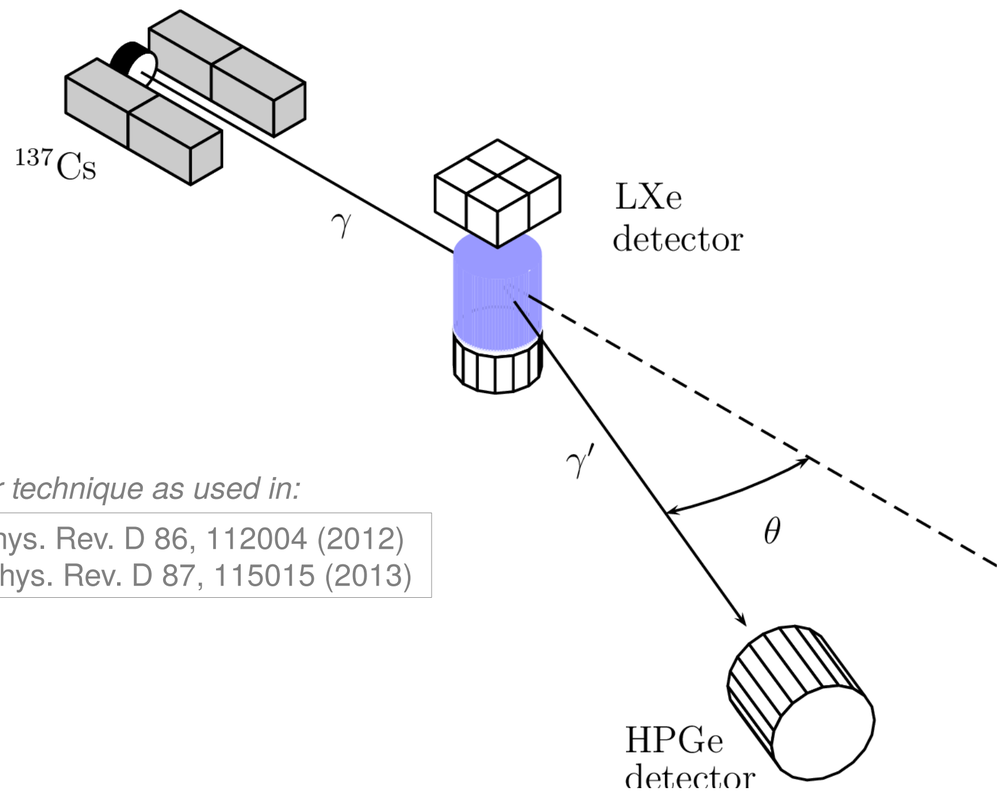

Similar technique as used in:

Aprile *et al*., Phys. Rev. D 86, 112004 (2012)
Baudis *et al*., Phys. Rev. D 87, 115015 (2013)

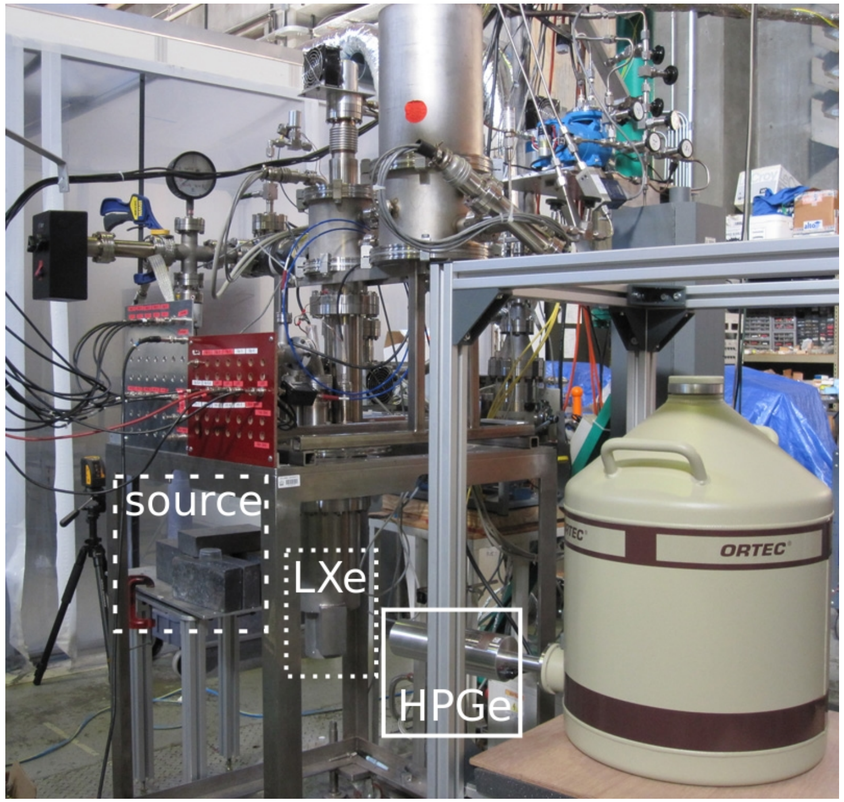

Rooney and Valentine, IEEE Trans. Nucl. Sci., 43, 1271 (1996)

- Trigger on coincidence of *HPGe* and *S2* → raw (prompt) *HPGe* signal, *S2* width trigger
- Require *S1* in coincidence in offline processing

Design Considerations

- 2-phase → charge and light yield
- 3D event vertex reconstruction
- PTFE support structure → maximize light detection efficiency
- Easily re-configurable with stackable pieces
- Reduced amount of materials in vicinity of sensitive volume → minimize systematics

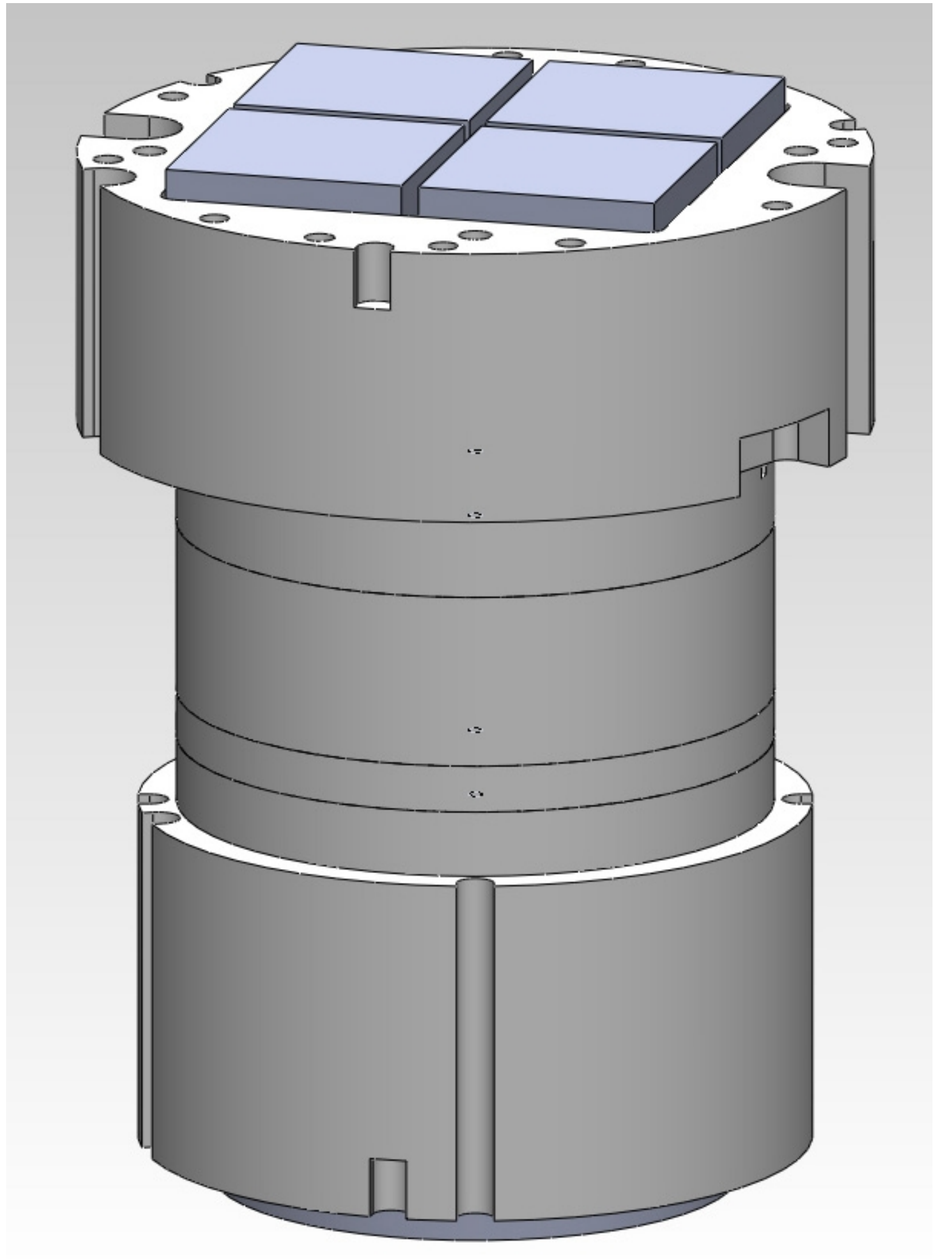

Design Considerations

- 2-phase → charge and light yield
- 3D event vertex reconstruction
- PTFE support structure → maximize light detection efficiency
- Easily re-configurable with stackable pieces
- Reduced amount of materials in vicinity of sensitive volume → minimize systematics

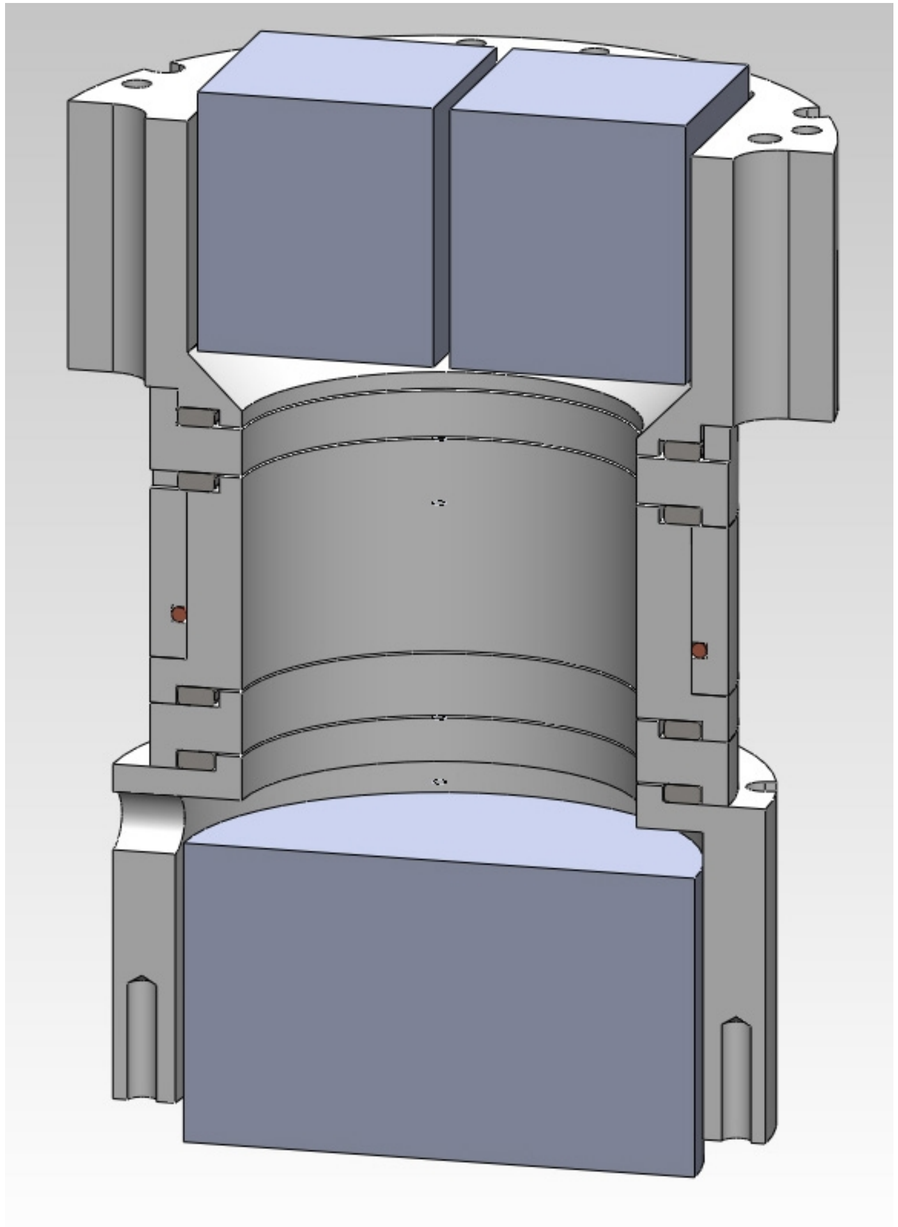

Design Considerations

- 2-phase → charge and light yield
- 3D event vertex reconstruction
- PTFE support structure → maximize light detection efficiency
- Easily re-configurable with stackable pieces
- Reduced amount of materials in vicinity of sensitive volume → minimize systematics

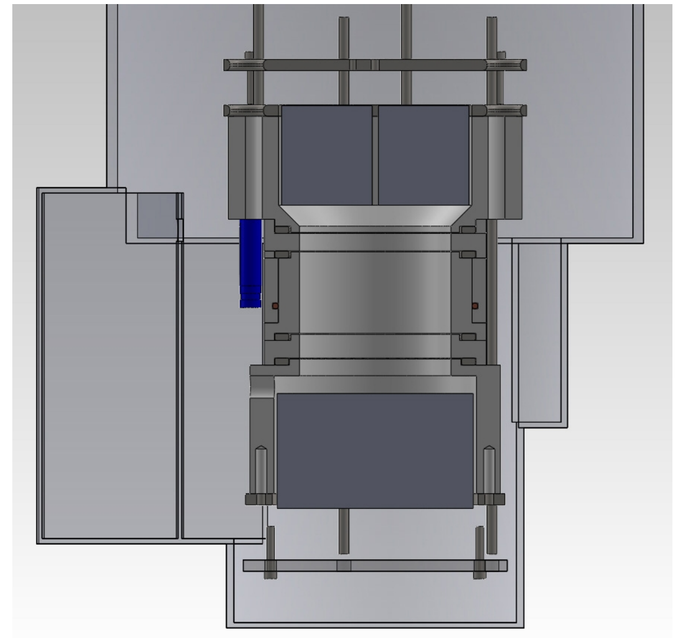

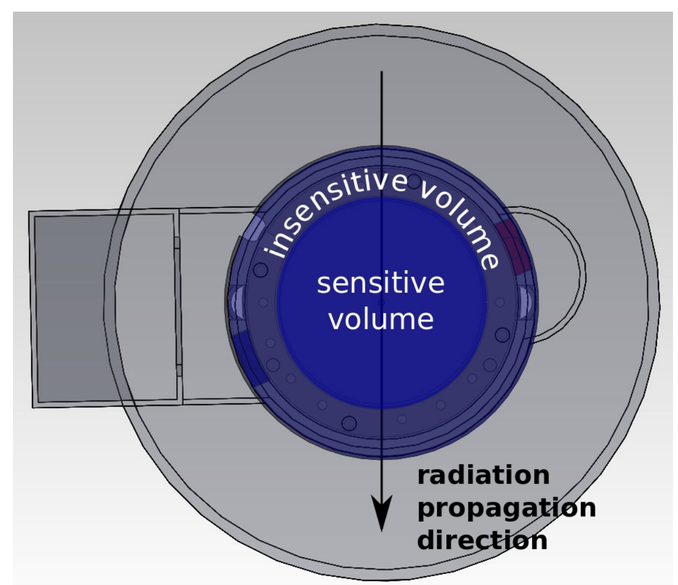

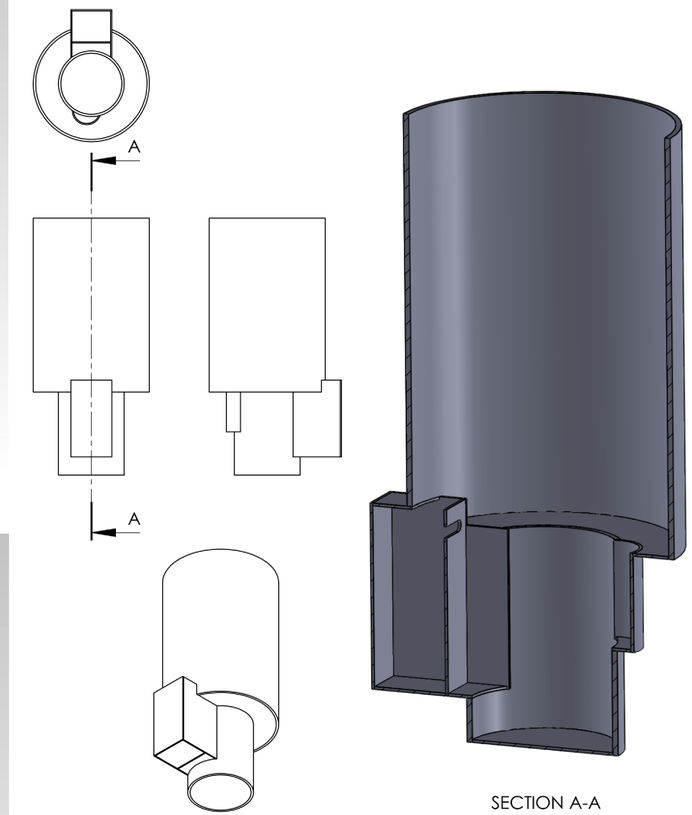

Design Details

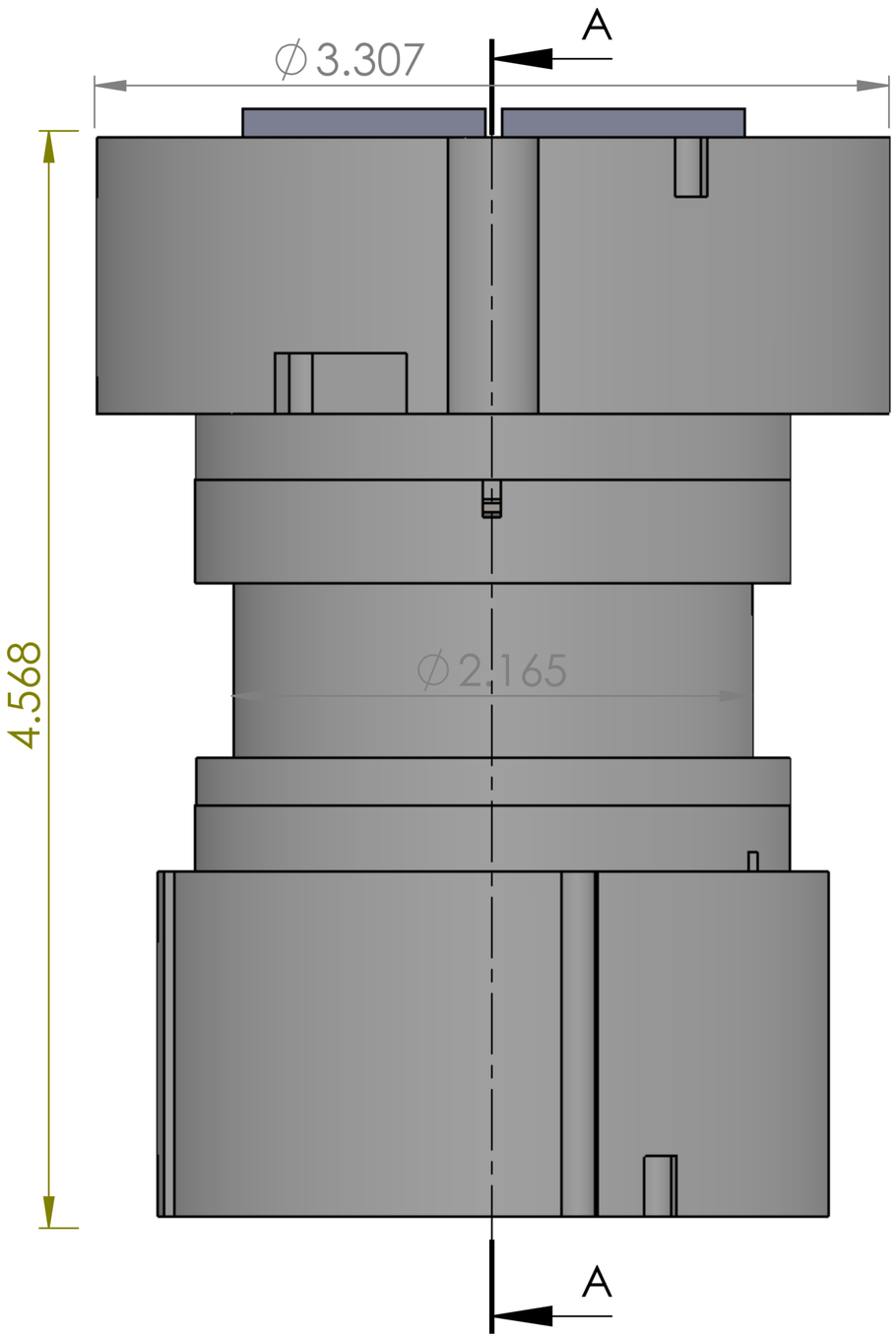

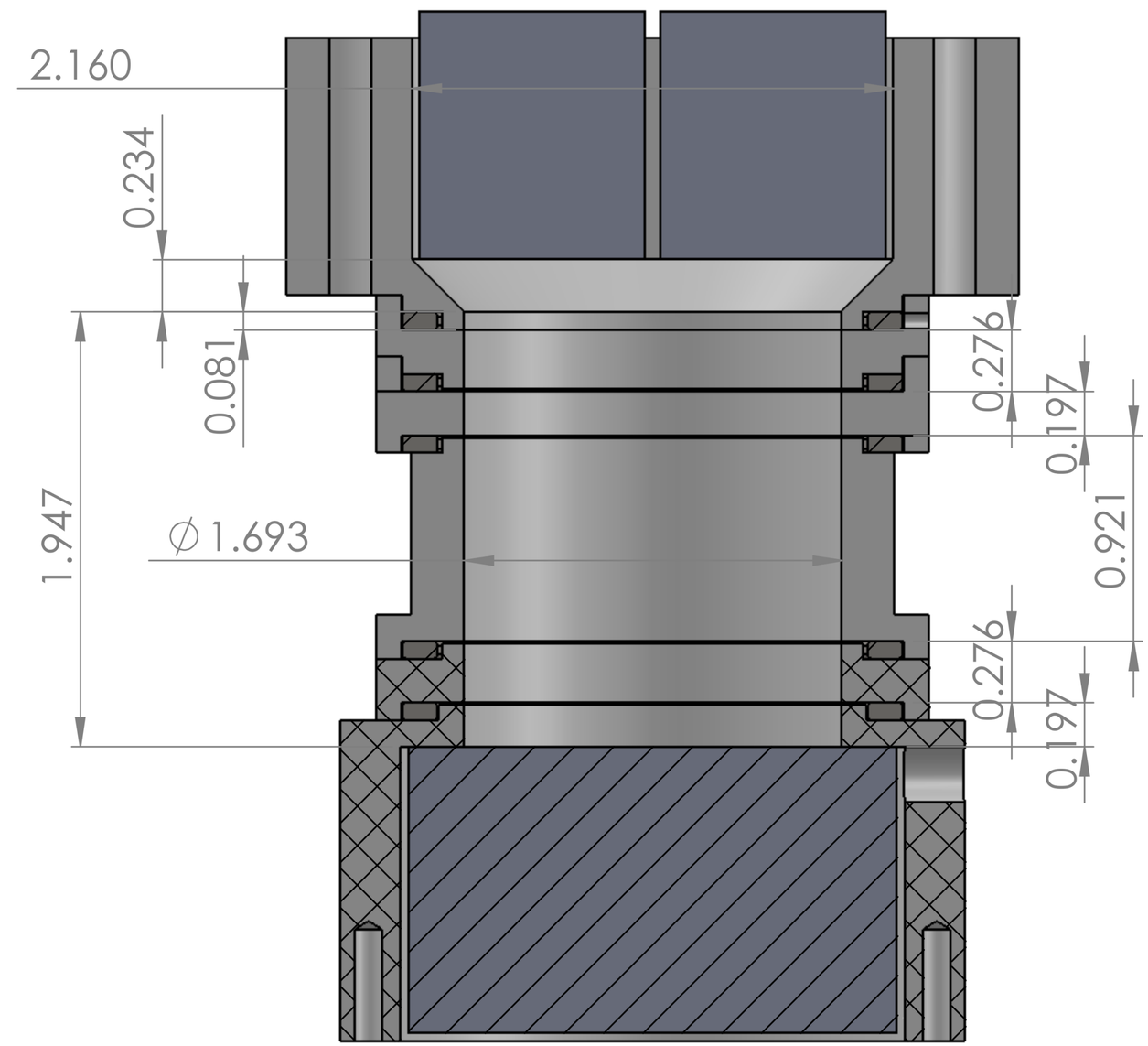

Design Details

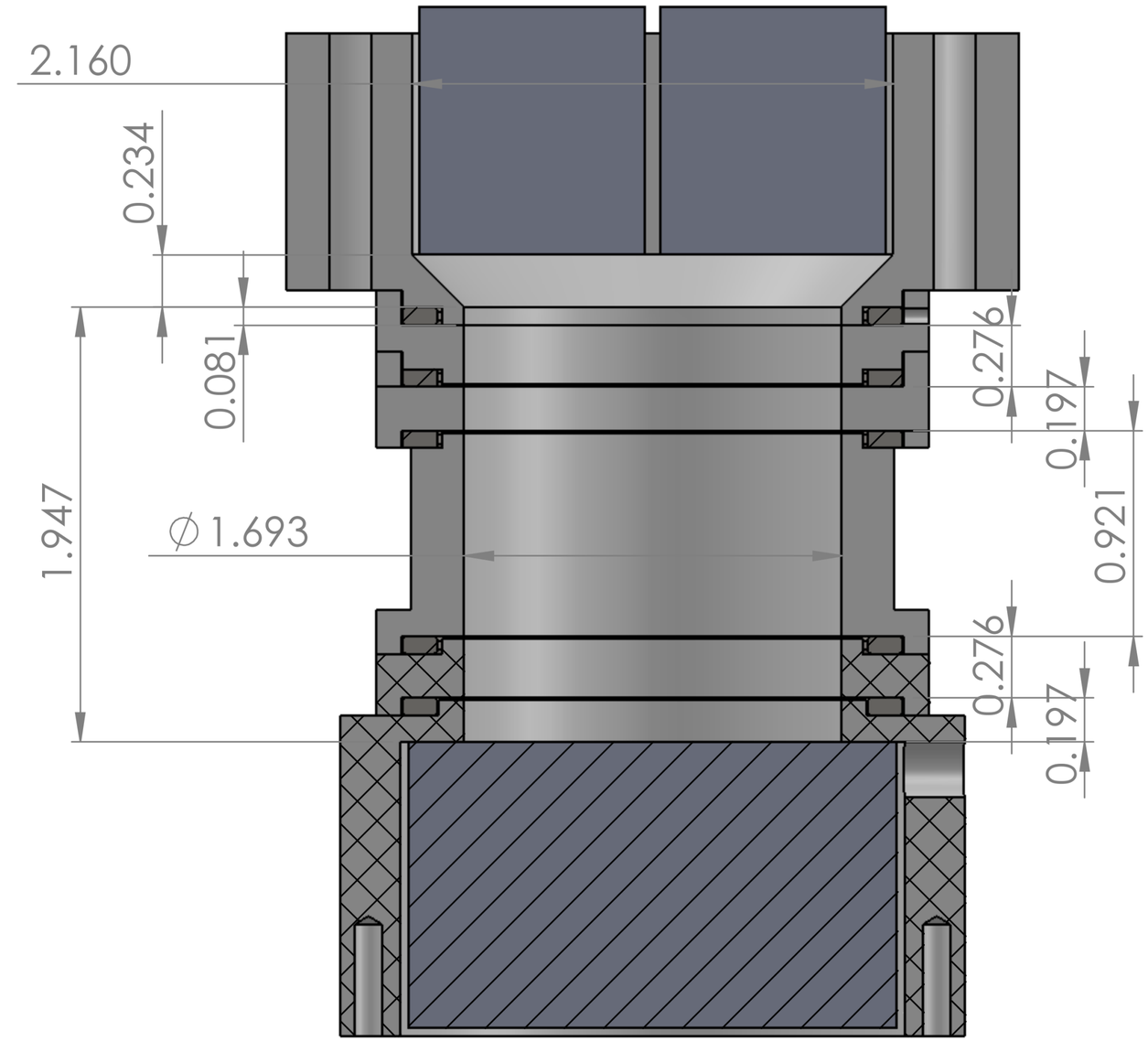

Design Details

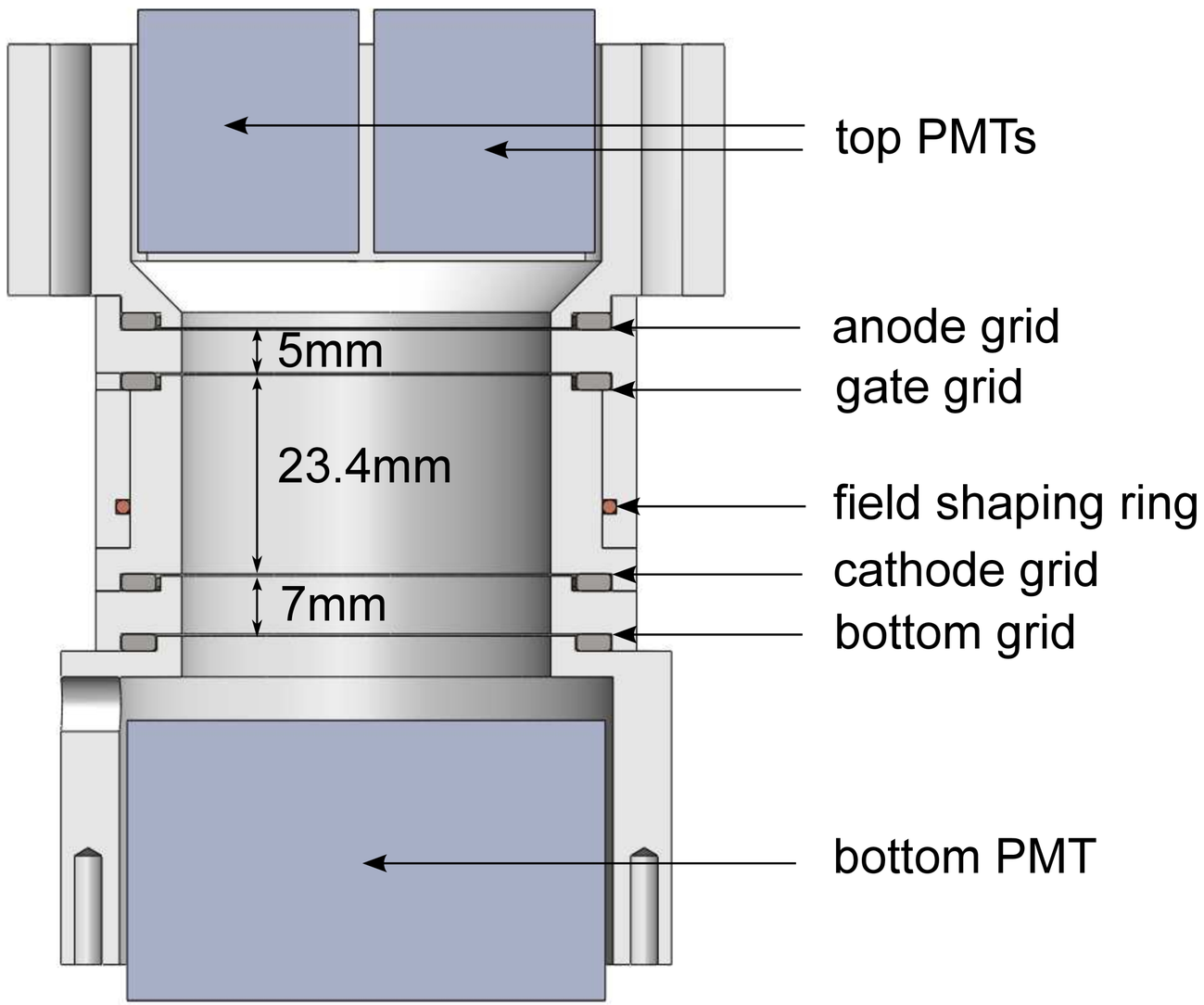

- Top PMTs (4): R8520-406-M4 SEL
- Bottom PMT: R6041-406 SEL

QE @175nm
>35%

16 channels

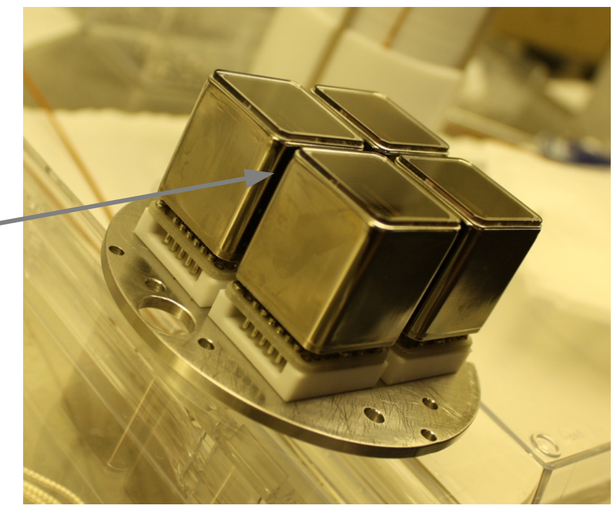

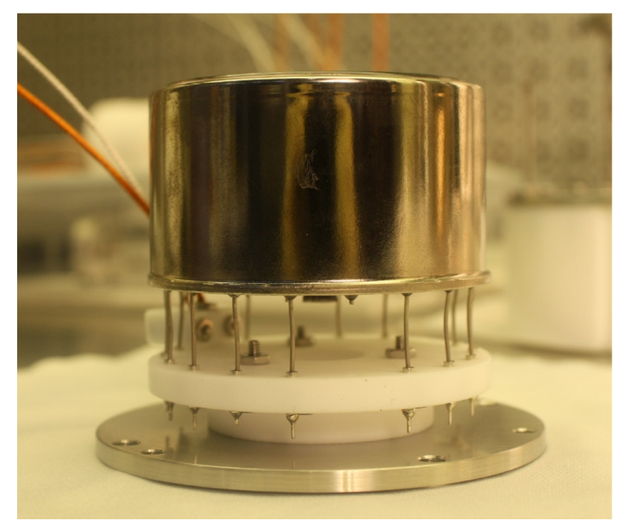

Design Details

- Hexagonal mesh, etched from SS foil @Rice University
- ~3mm pitch
- 125um thickness (anode, gate, cathode)
- 25um thickness (bottom)

Grid	Voltage [kV]
anode	+4.5
gate	0 (gnd)
cathode	-0.35, -1.05, -2.36, -5.50
bottom	0 (gnd)

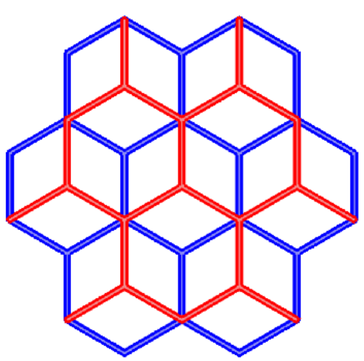

Anode/cathode overlay

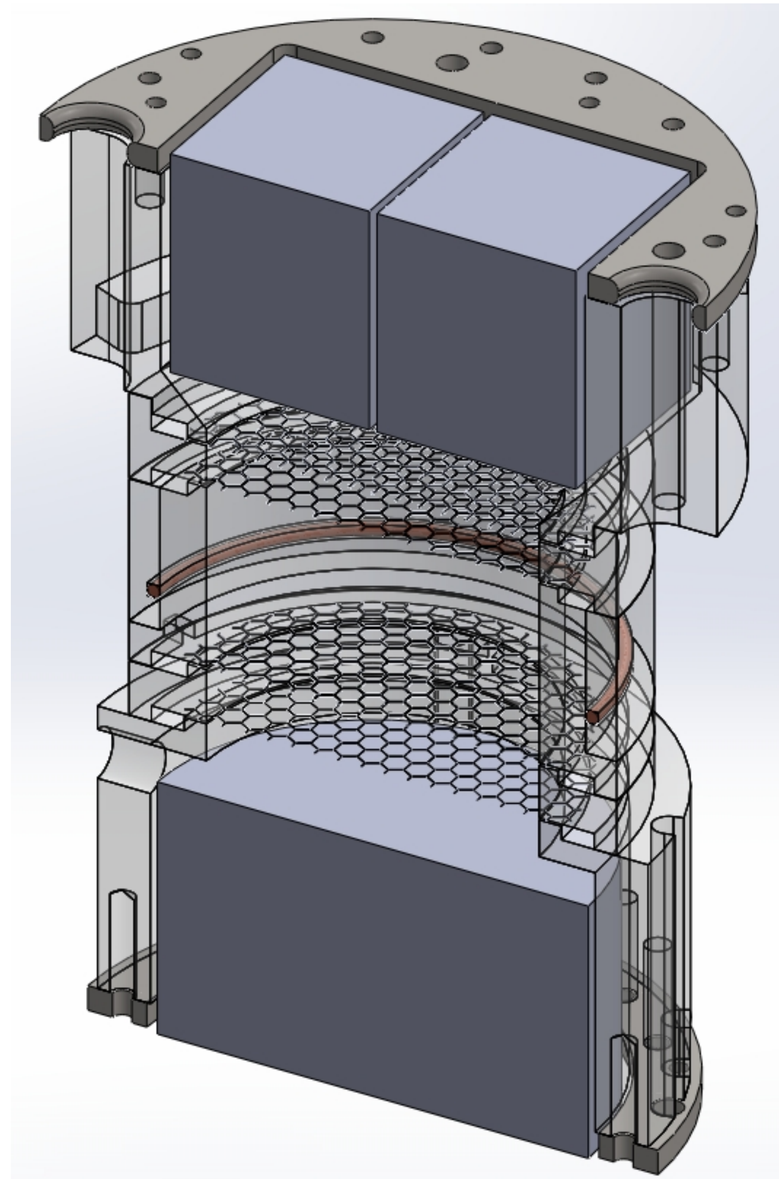

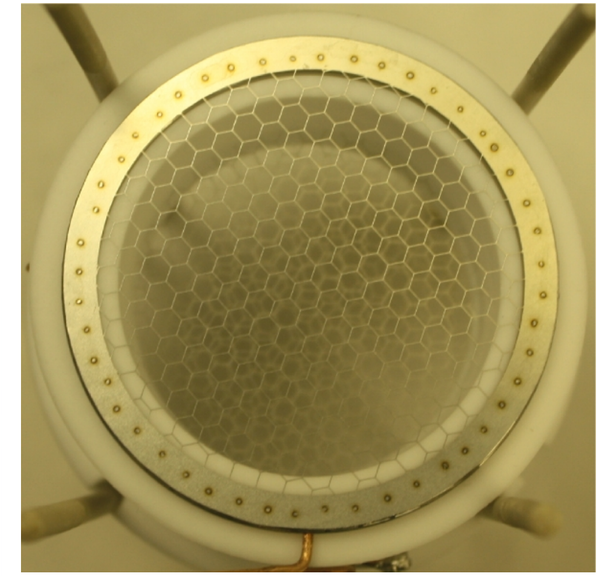

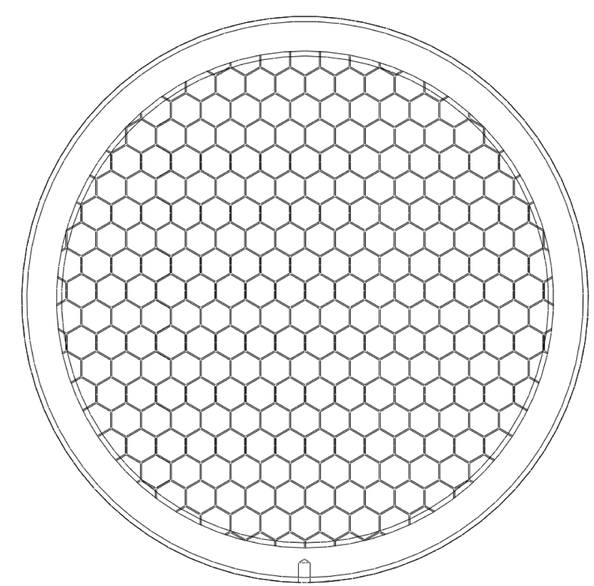

Cryogenic and Purification System

Total LXe mass: ~2.2kg
Active volume mass: ~100g

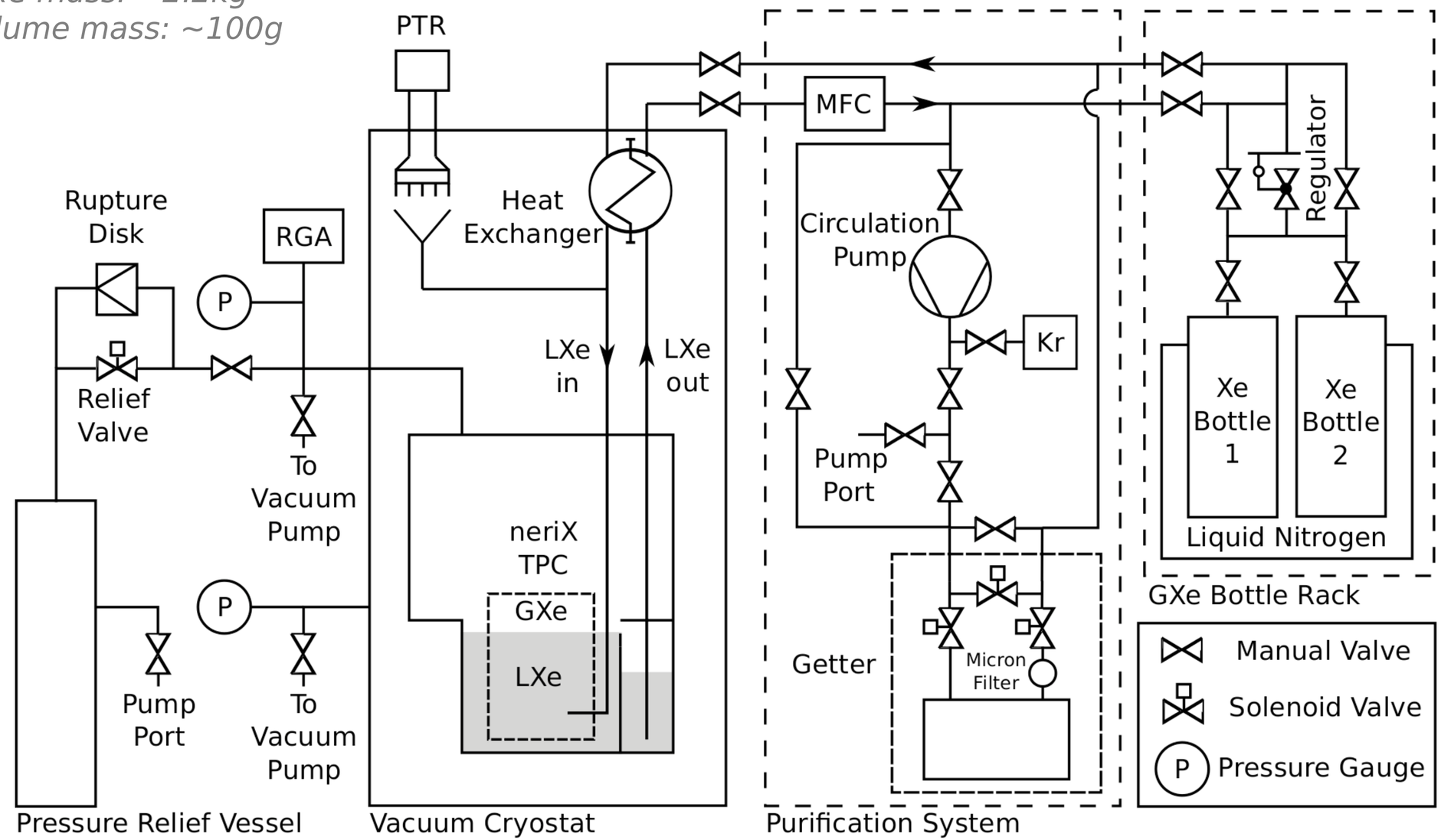

Same system as used for:

Aprile *et al.*, Phys. Rev. D 86, 112004 (2012)
Plante *et al.*, Phys. Rev. C 84, 045805 (2011)

Design Details

- Level set using spill-over (weir method)
- Level adjusted with motion feedthrough
- Custom capacitive level meters (2)
- Accurate to ±33μm

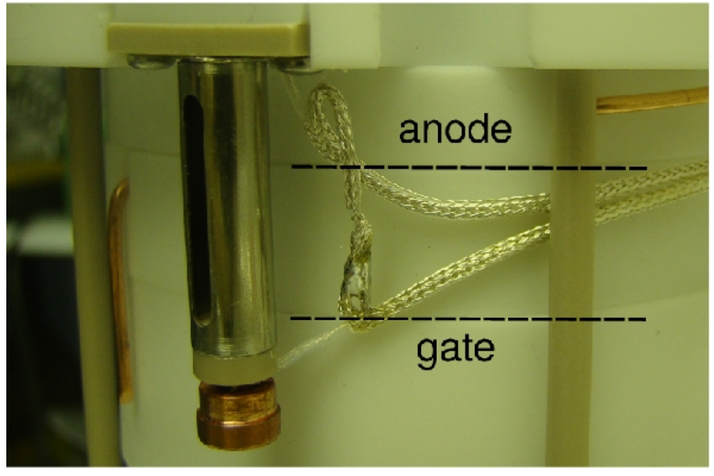

Total LXe mass: ~2.2kg
Active volume mass: ~100g

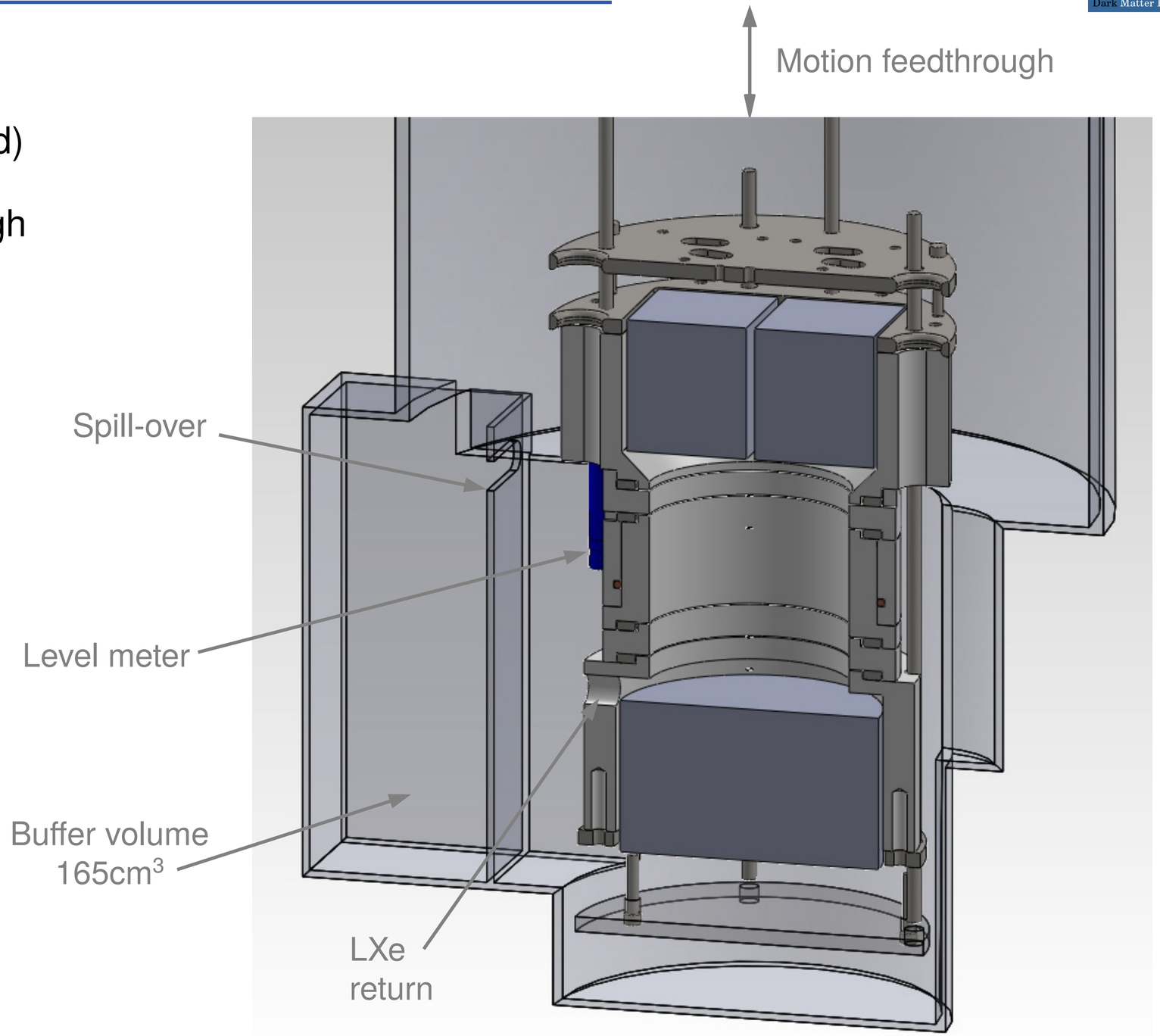

Electric Field Simulation

- 2D and 3D COMSOL sim
- Verify drift field and extraction efficiency
- Field variation 6-8%
- Define fiducial volume

Cathode [kV]	Field [kV/cm]
-0.35	0.21
-1.054	0.49
-2.356	1.01
-5.500	2.25

~1 kV/cm field

Augmented 2D model

Simple 2D model

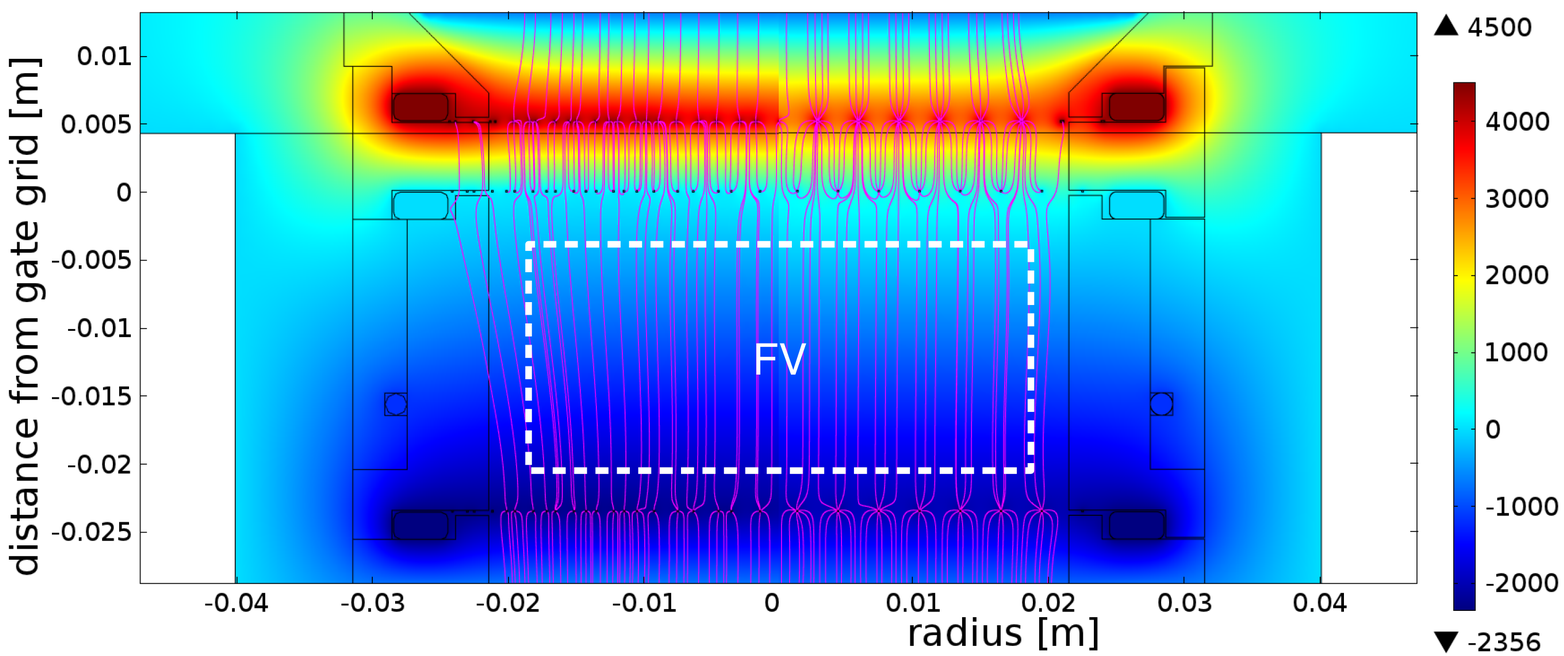

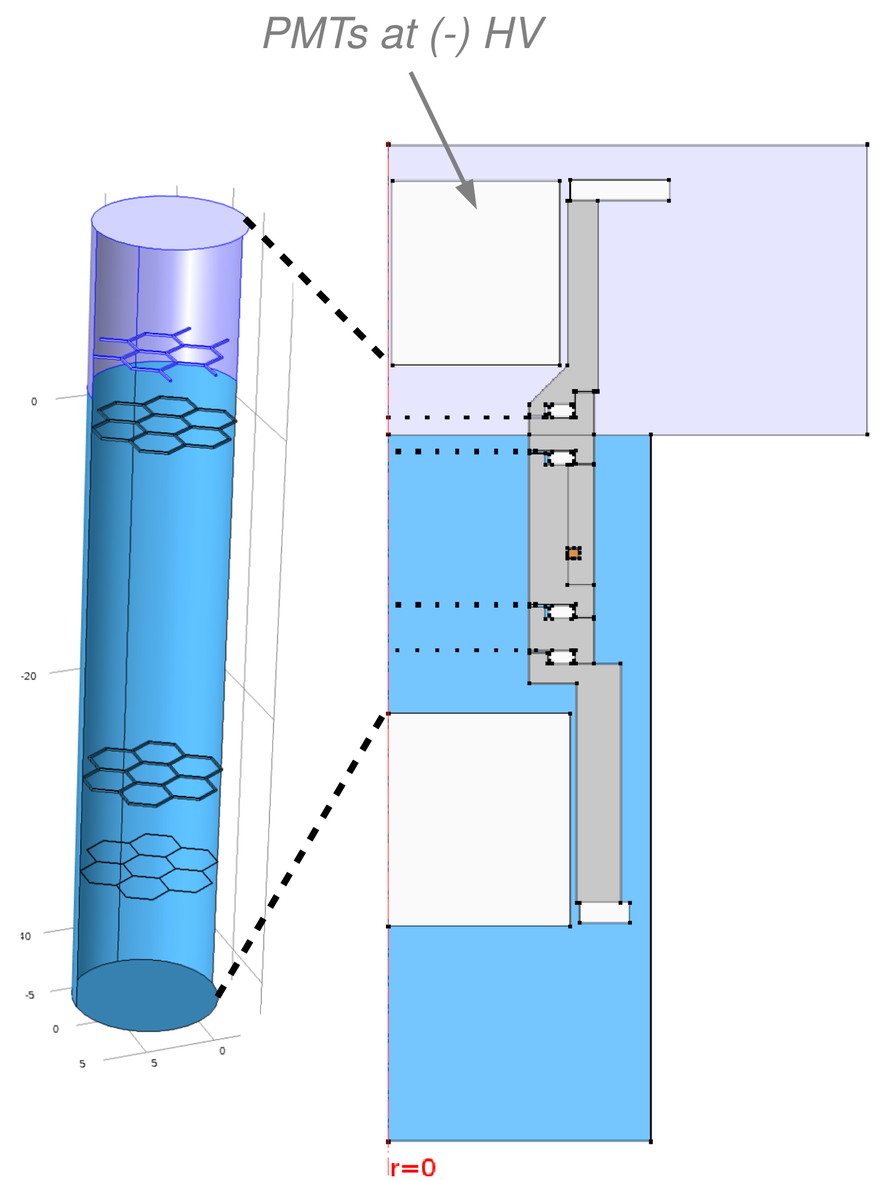

Light Collection Simulation

- Light collection efficiency simulation using GEANT4
- Tune grid reflectivity to match observed depth dependence of S1

Absolute photon gain:
g1 = (11.5 ± 0.5)%

= LCE · QE · internal collection
= 0.42 · 0.37 · 0.75

Uniform light collection of bottom PMT

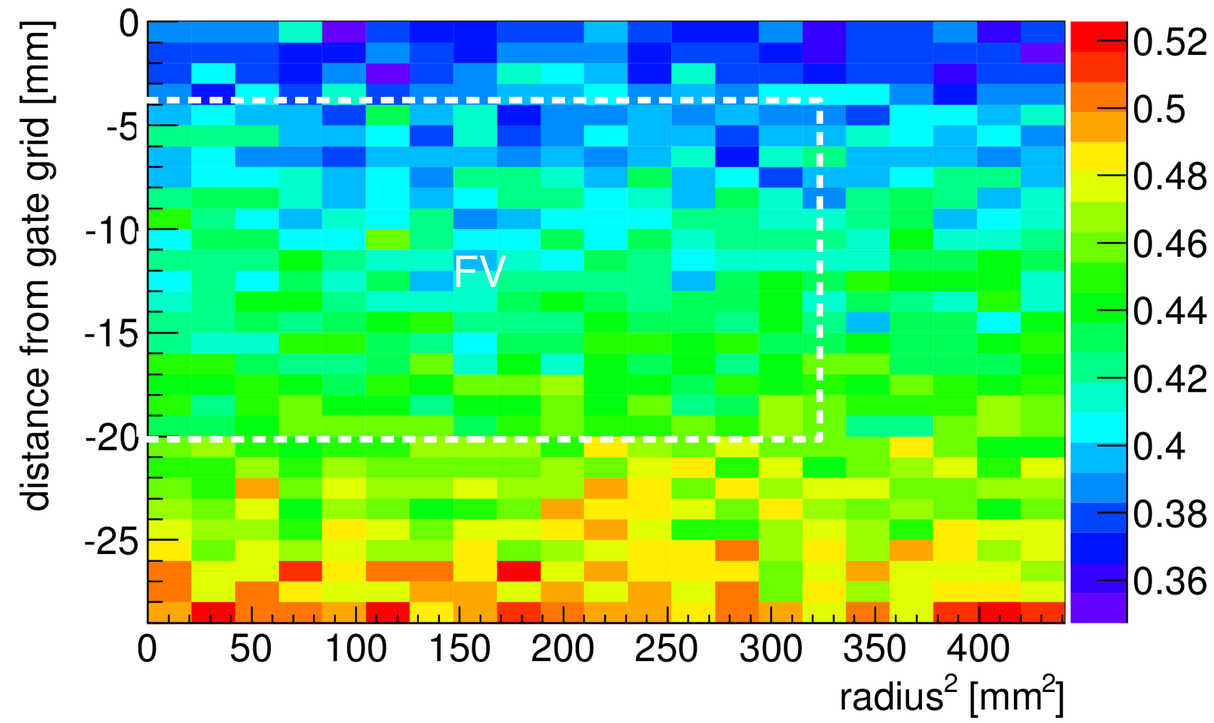

Good matching of depth dependence

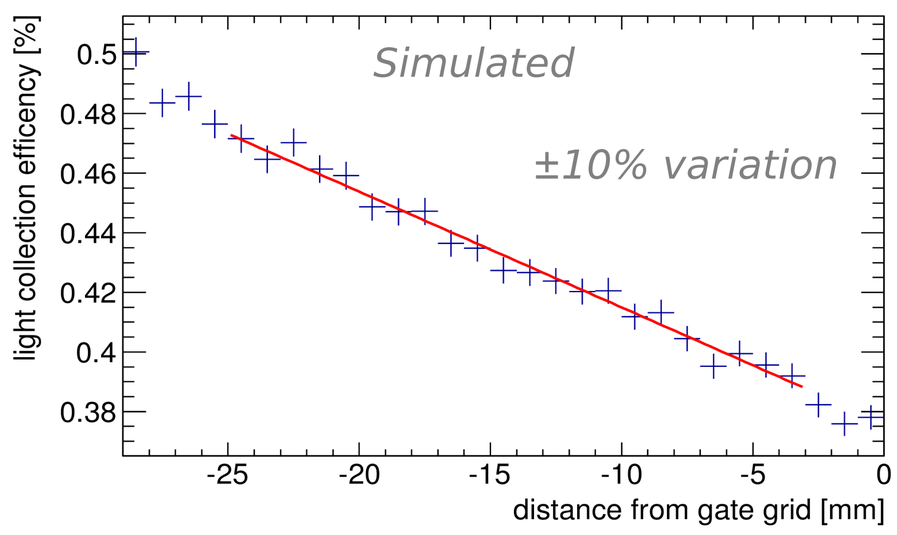

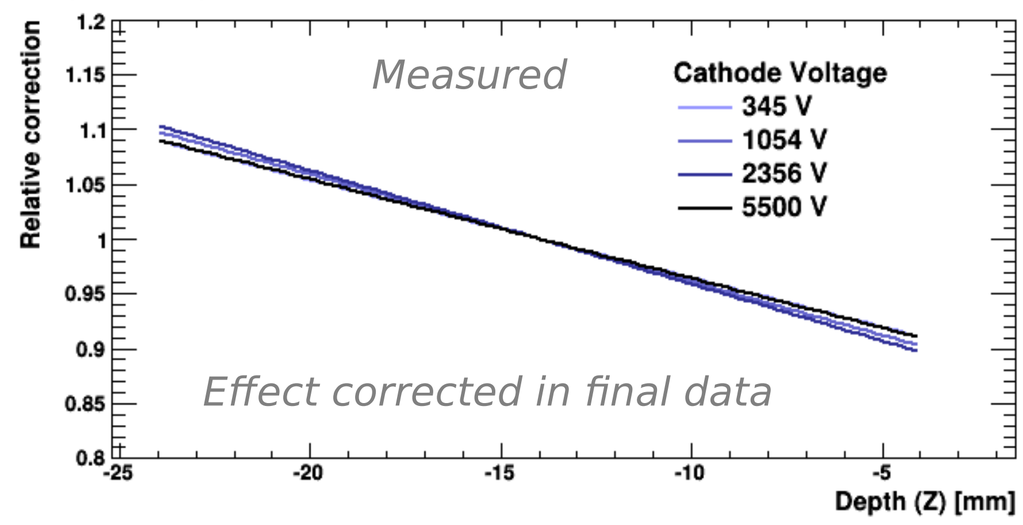

Position Reconstruction

- Reconstruction in x-y using χ^2 network

CCT data @ ~1 kV/cm field

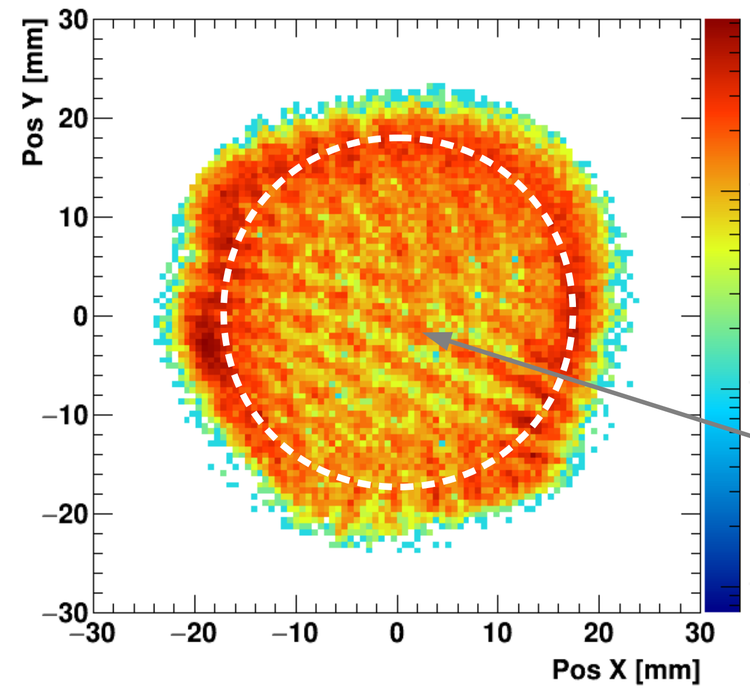

Grid points resolved (1.7 mm)

- Directly measure electron drift velocity

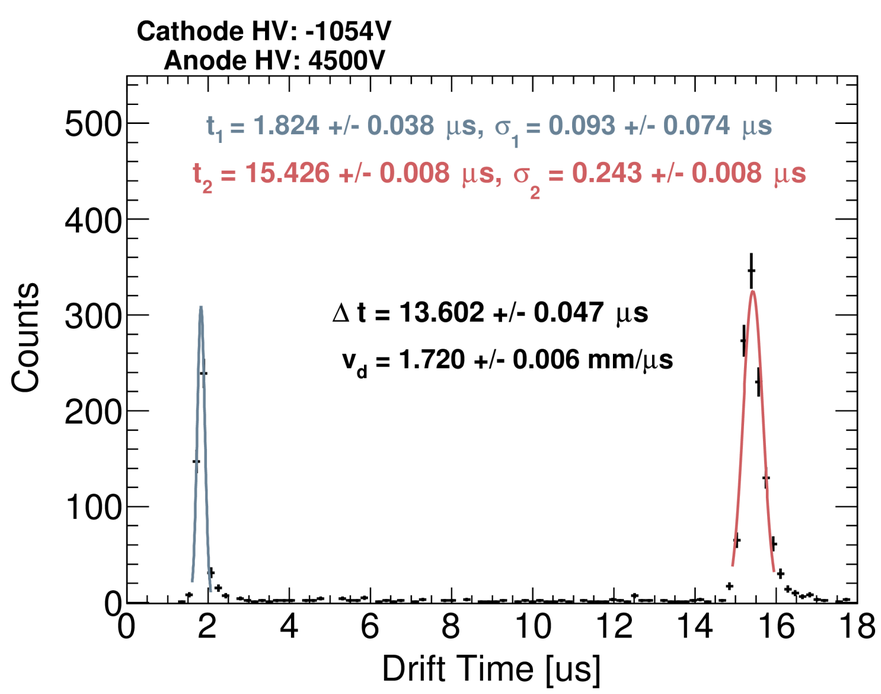

Drift field [V/cm]	210	490	1000	2250
		v_d [mm/μs]		
Run 11	1.538	1.747	1.966	2.216

Photoionization from grids:
(S2sTot[1]/S2sTot[0])<0.02

Calibration

Average PMT gain:
~6x10^5 electrons/pe

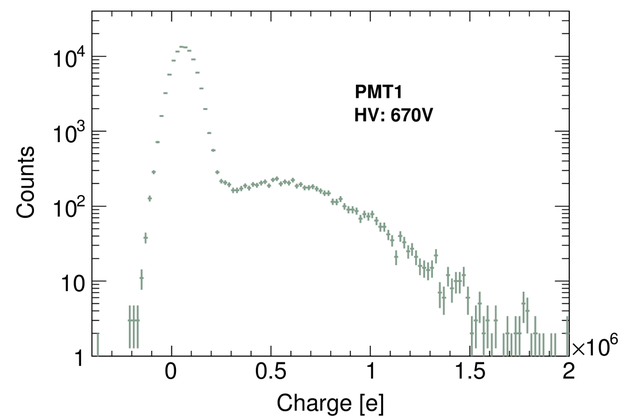

spe response

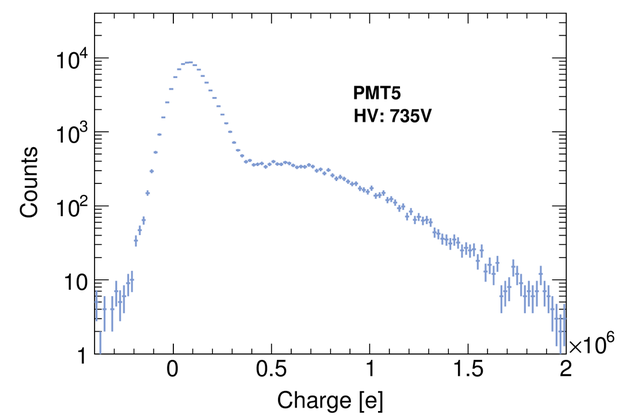

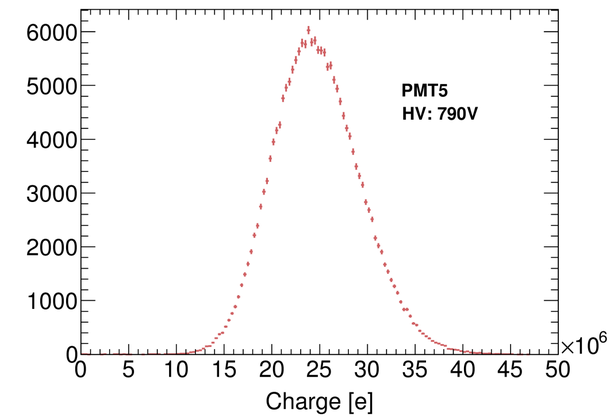

mpe response

Regular calibrations

- PMT gain using blue LED, UV fiber
- Detector response to ^{137}Cs and ^{57}Co

5μCi and 120μCi

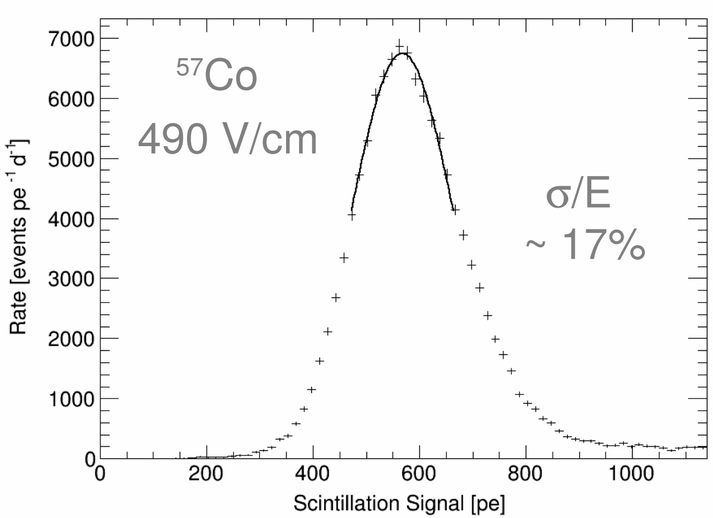

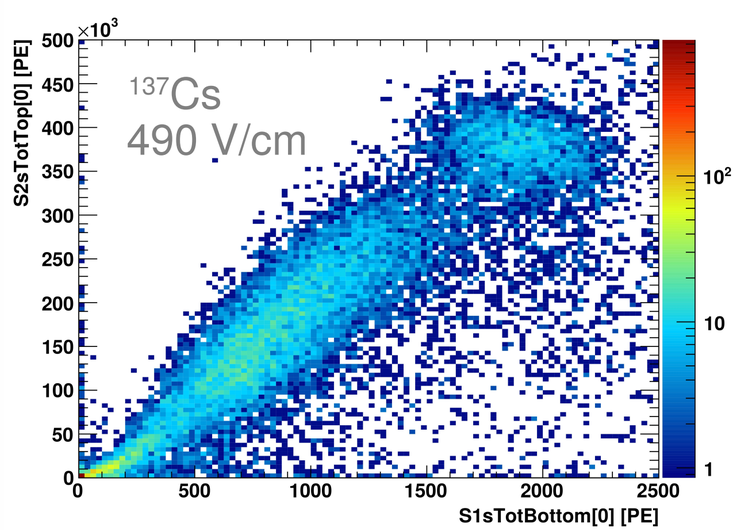

Typical S1 light yield, with field

@122keV: ~3-6 pe/keV

@662keV: ~2-3 pe/keV

Track 662keV yield during coincidence measurements using accidental peak

Calibration

Directly measure:

Single electron gain

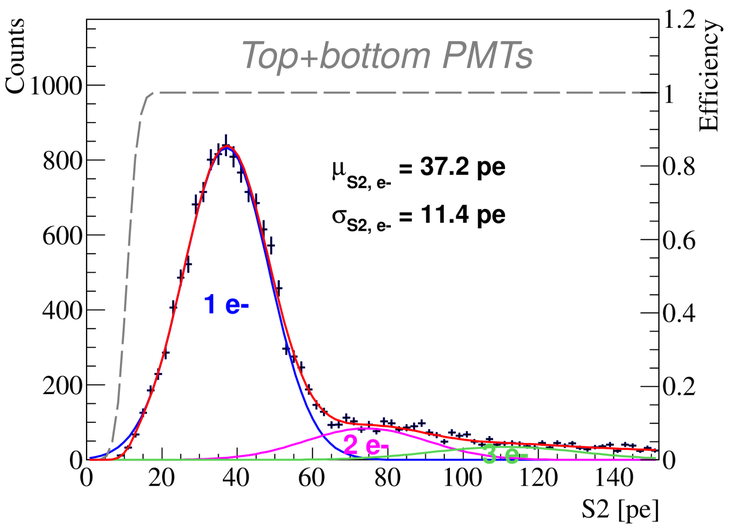

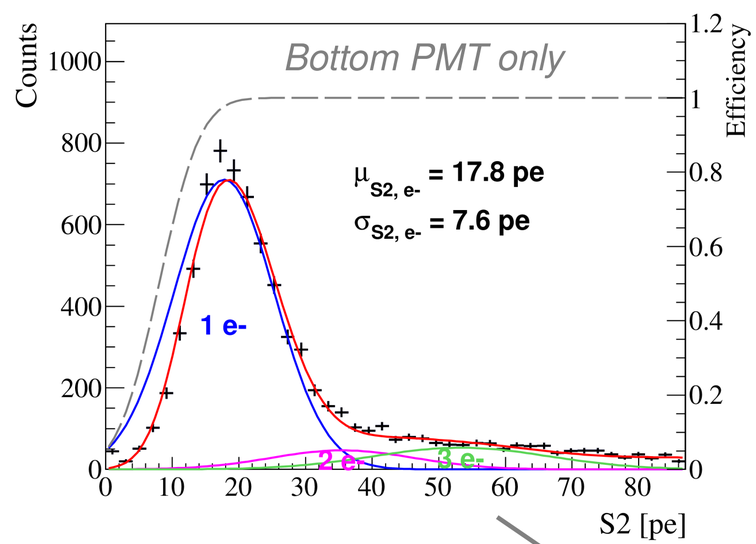

Electron extraction efficiency

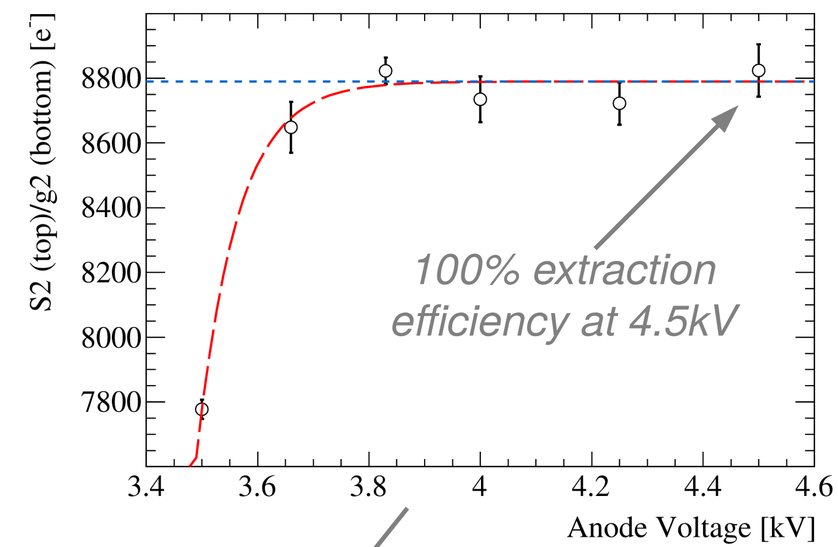

Absolute charge gain:
g2 = ~15-17 pe/electron

Single electrons in XENON100:

Aprile *et al.*, J. Phys. G 41, 035201 (2014)

HPGe calibration

Regular HPGe calibrations

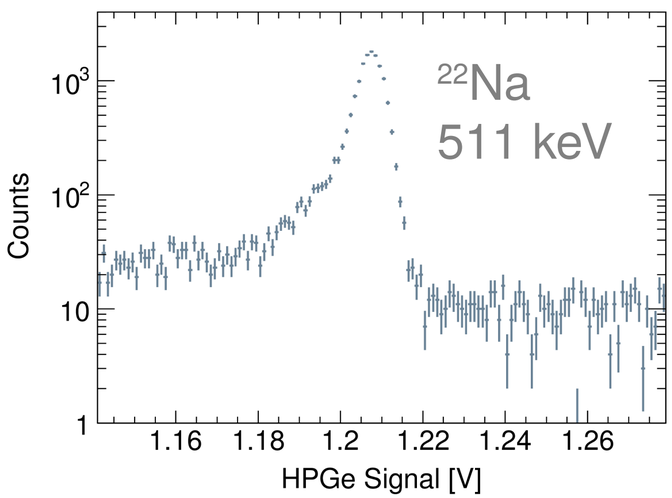

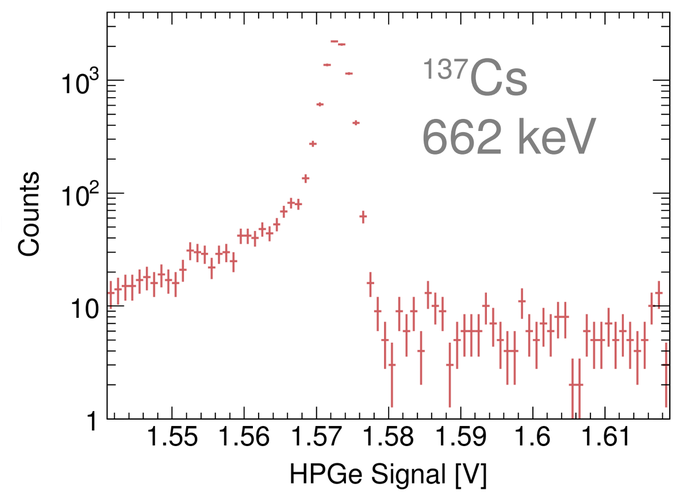

2-point energy calibration

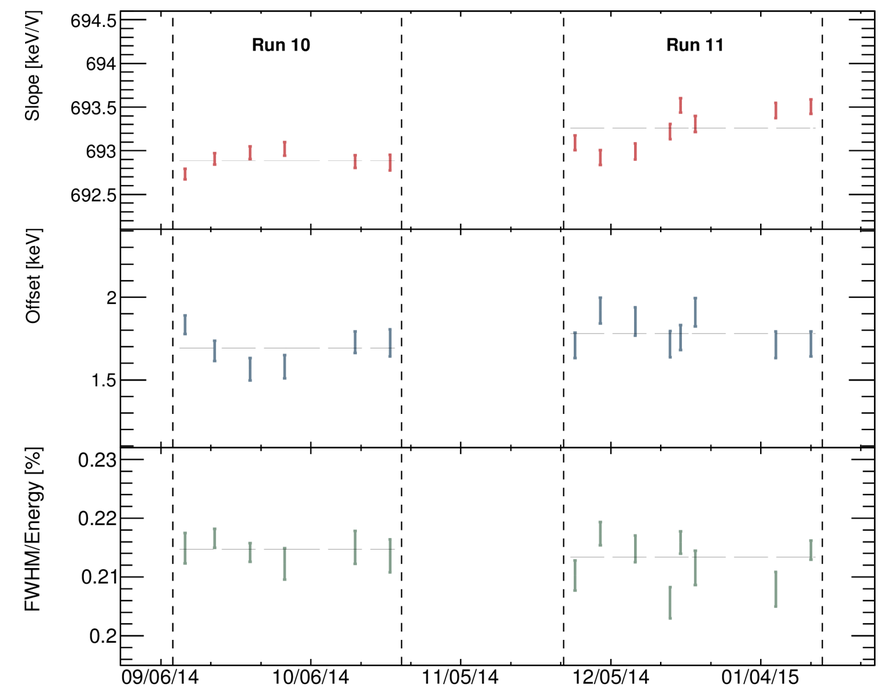

Energy resolution (±1σ) for 0 keV recoils during CCT measurements:

0.6 keV

Specs: Ortec GEM Series Coaxial HPGe Detector, Model GEM40-76, CFG-SL-76, DWR-30B
P-type, 40% efficiency, 76mm endcap

Measurement

Details

- 4 drift fields: 210, 490, 1000, 2250 V/cm
- 2 angles: 0 and 25 degrees

  0-45keV 30-130keV
- ~30-100k events/setting
- Total measuring time ~50-150 hrs/setting

Infer E_r from:
661.7 keV – HPGe energy

- Light yield $(E_r) = S1(E_r)/E_r$
- Charge yield $(E_r) = S2(E_r)/E_r$

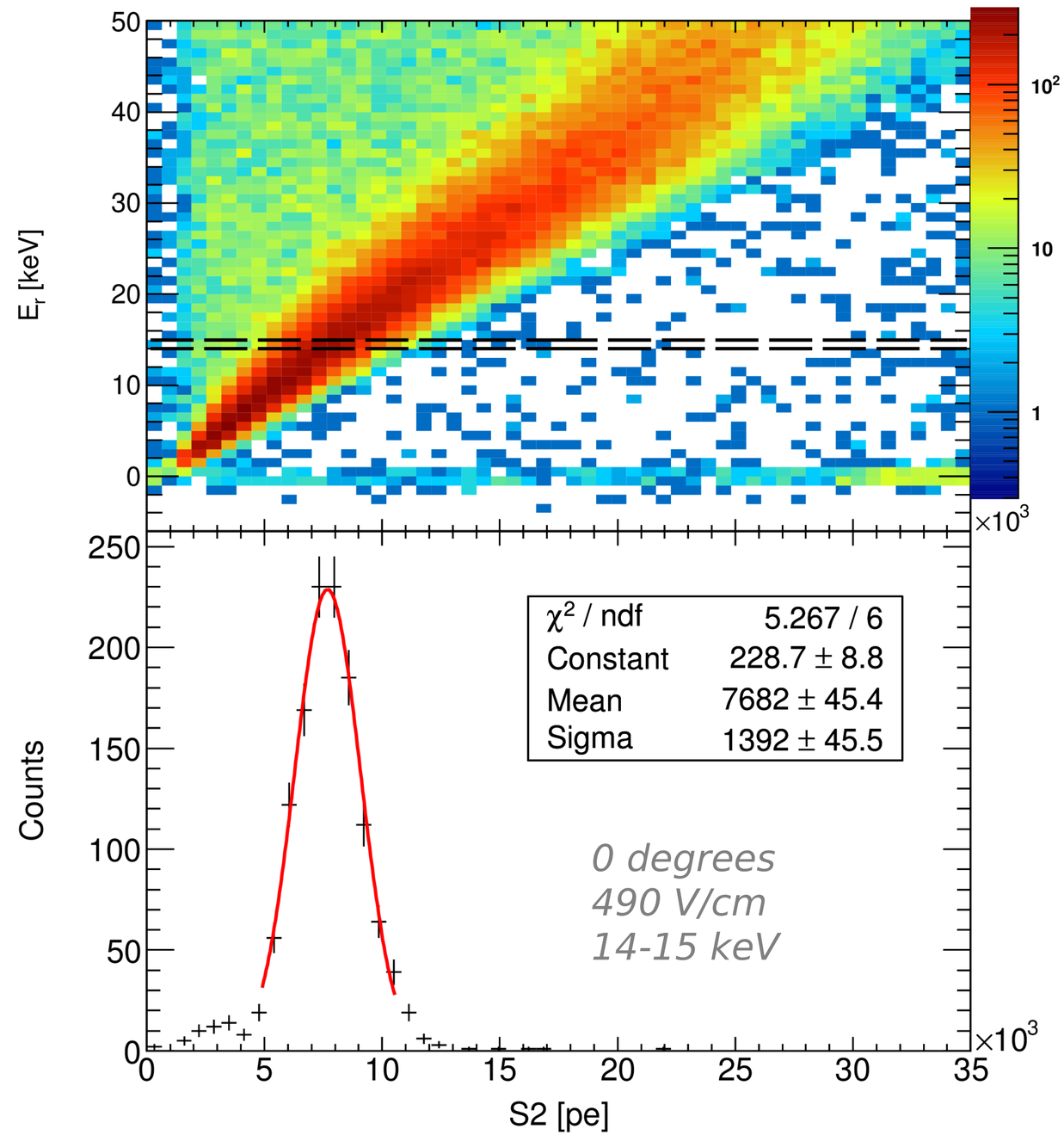

Measurement

Low-E Results

Light yield

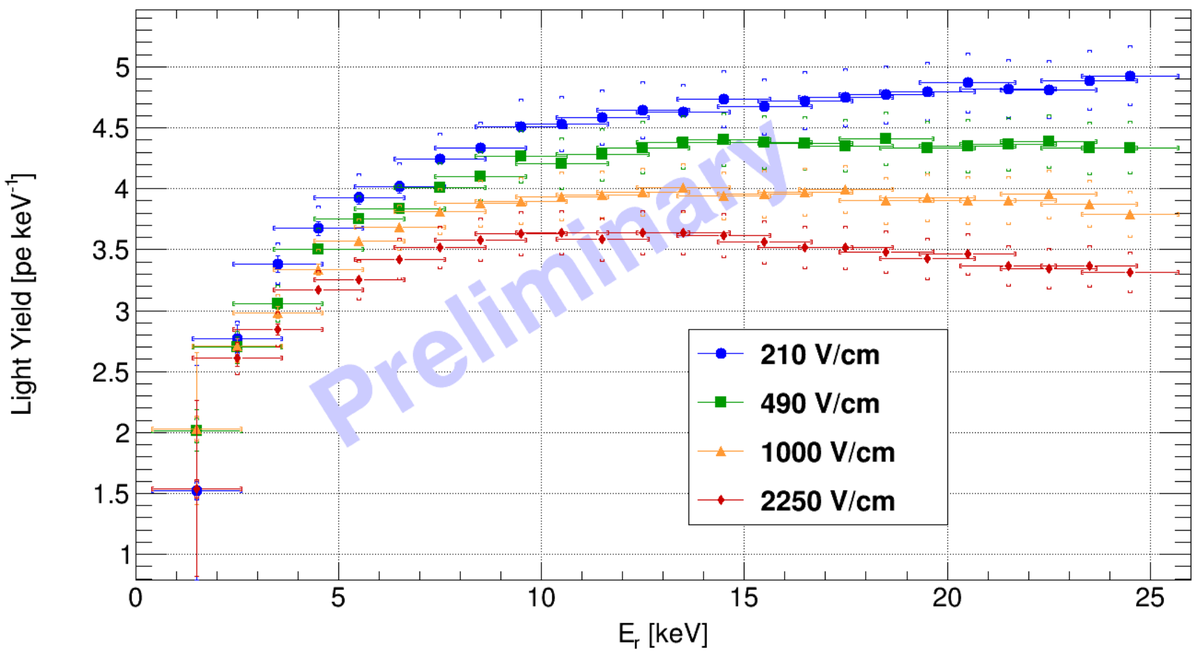

Charge yield

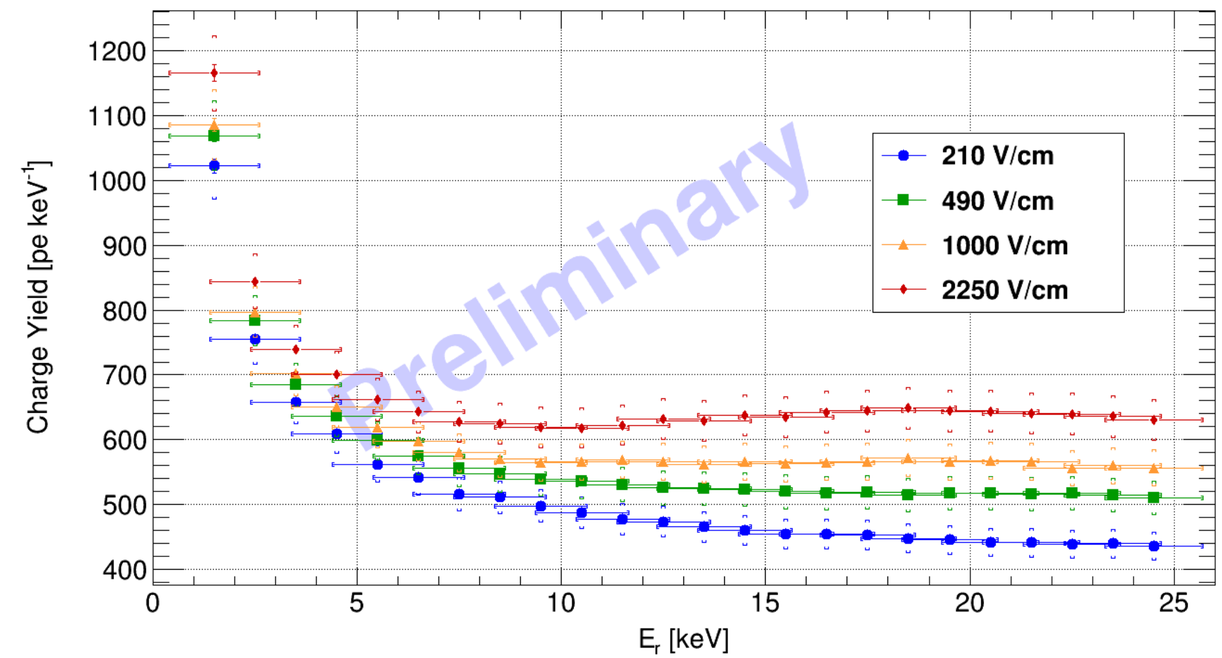

- Measured very low recoil energies with good precision
- Yields vary significantly with recoil energy and field
- Anti-correlation observed
- Yields from different baseline in agreement

Measurement

Low-E Results

Absolute light yield = light yield/g1

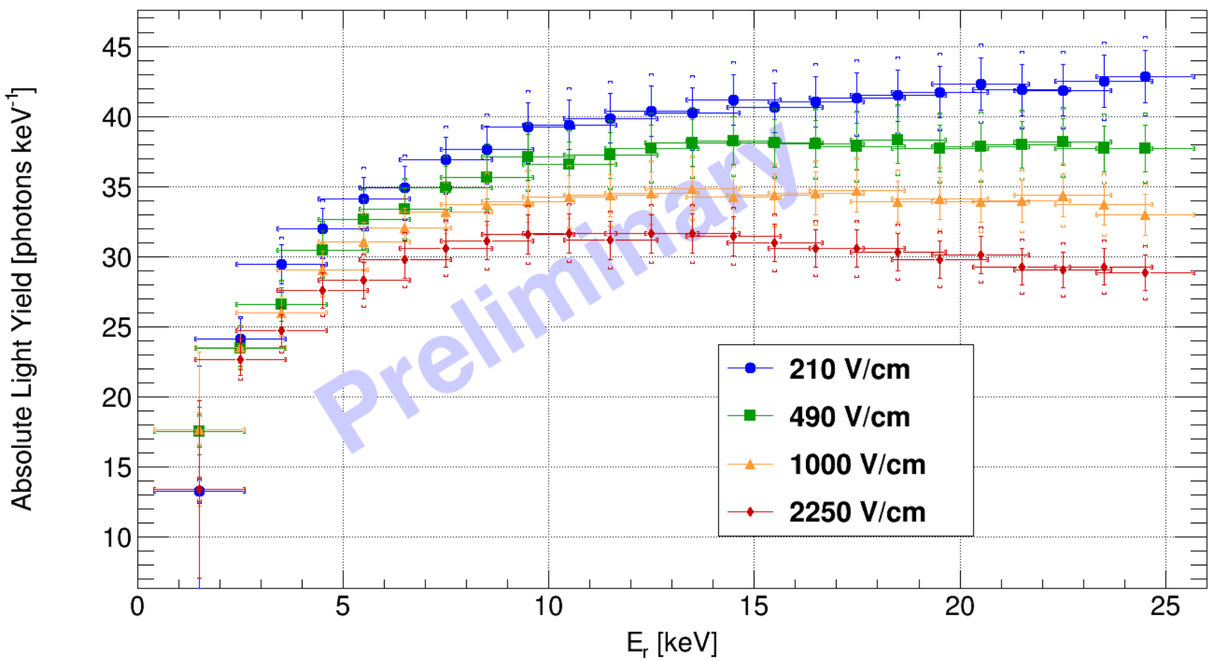

Absolute charge yield = charge yield/g2

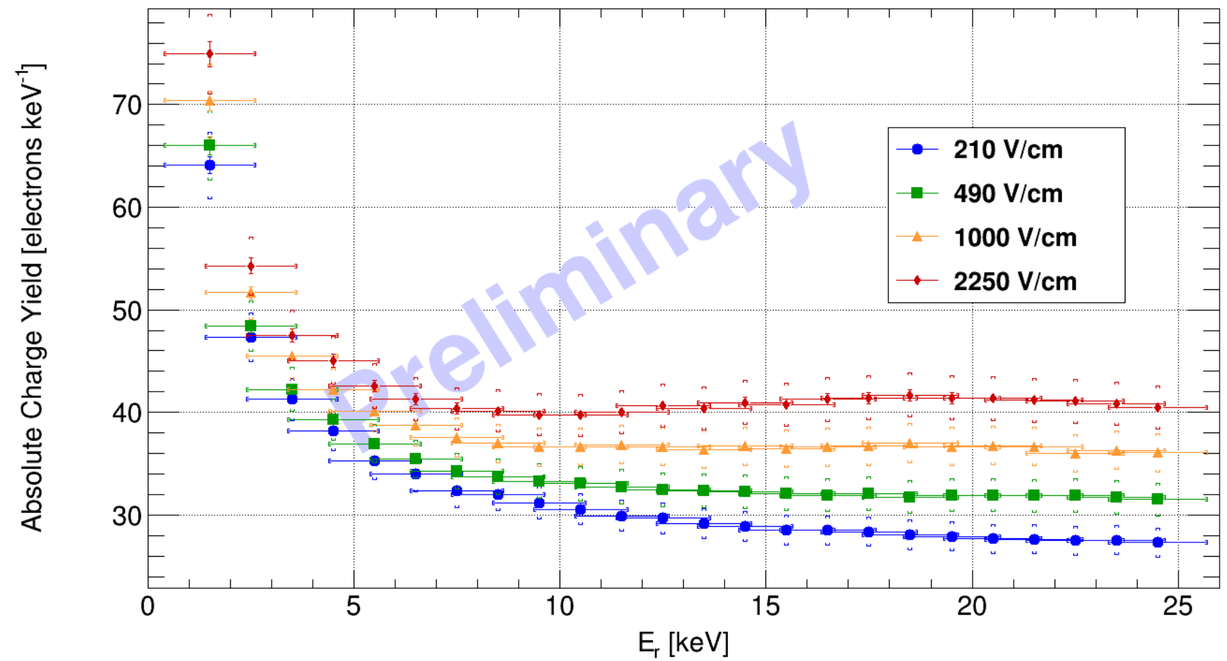

- Detector-independent property
- Useful for comparison with other results and in simulation

NEST Comparison

Absolute light yield = light yield/g1

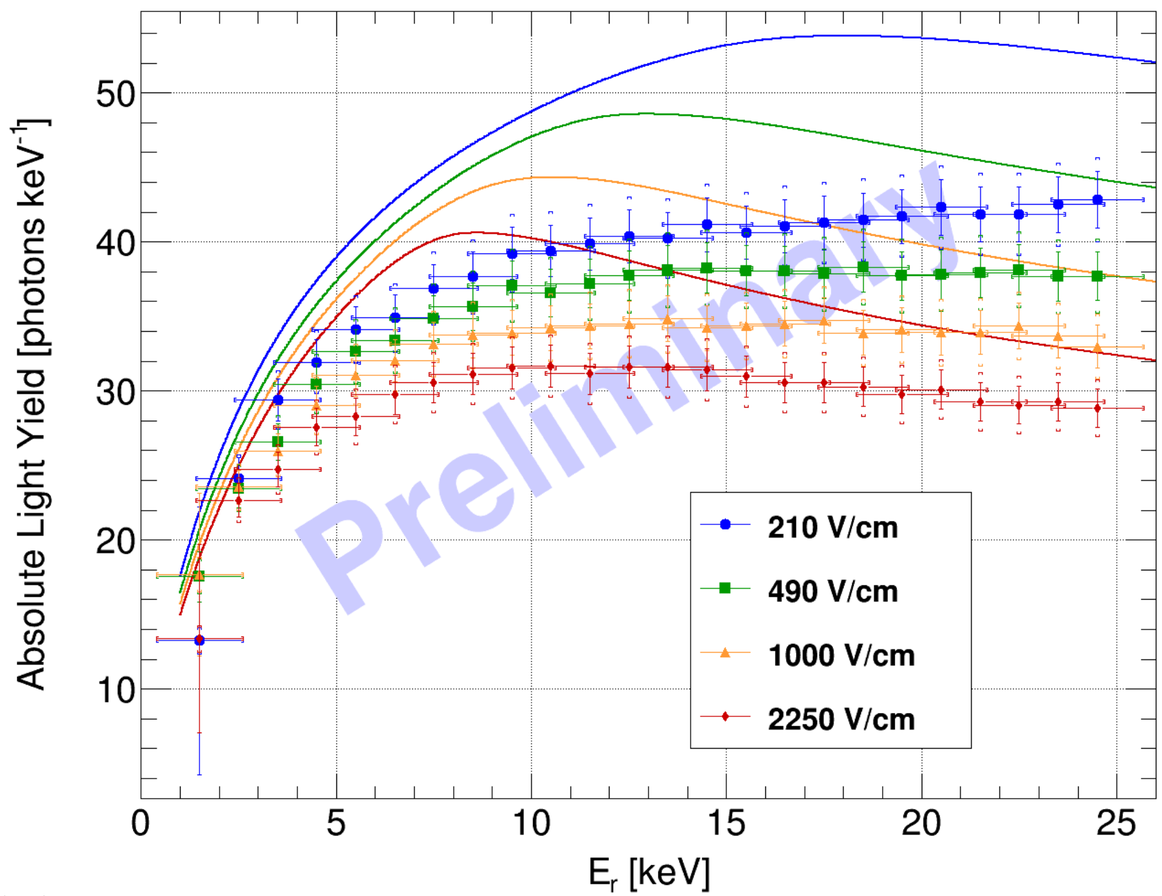

Absolute charge yield = charge yield/g2

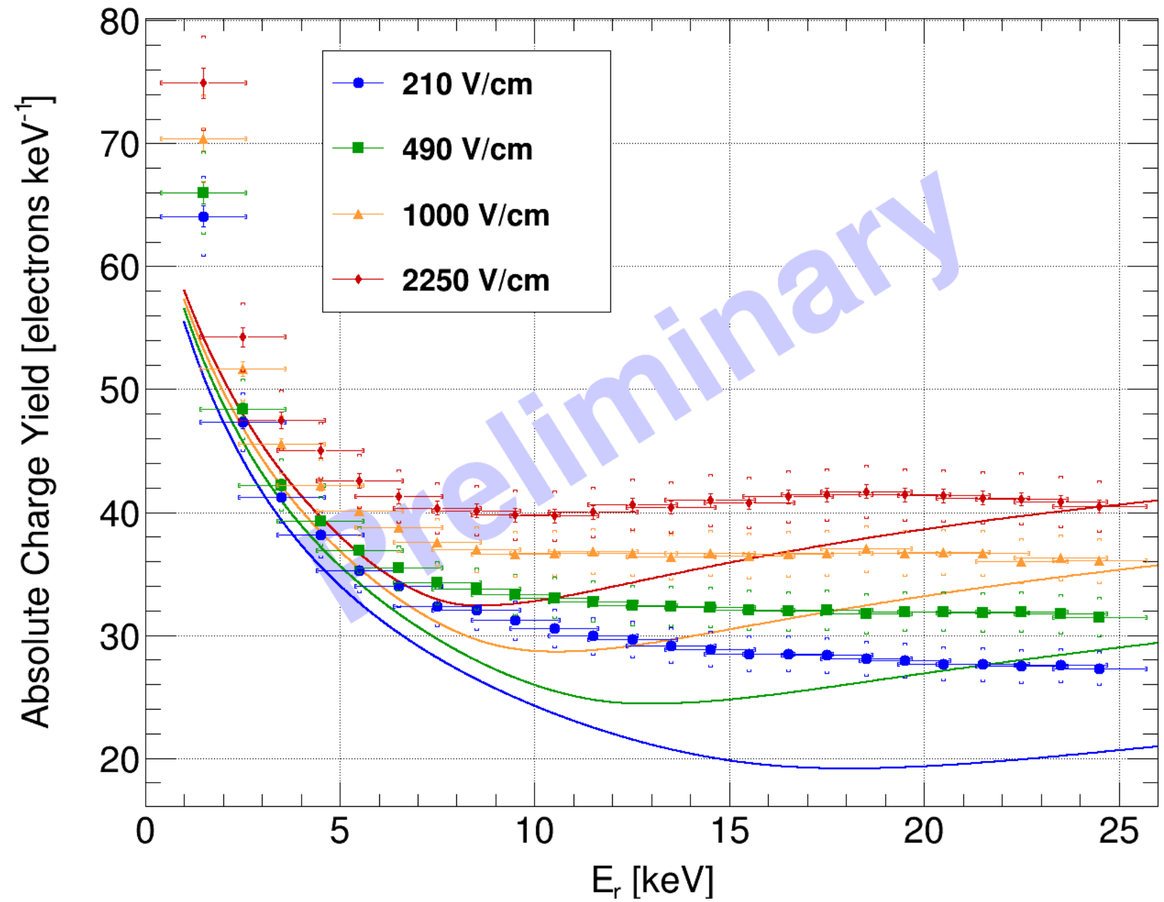

NEST v0.98

Szydagis *et al.*, JINST 6, P1002 (2011)

NEST fields: 200, 500, 1000, 2000 V/cm

NEST/LUX Comparison

neriX ER Compton data

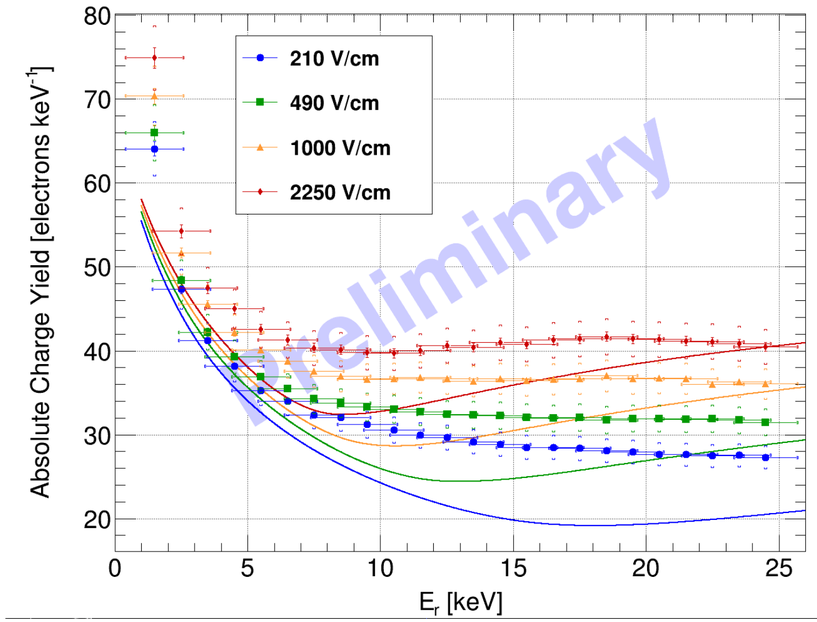

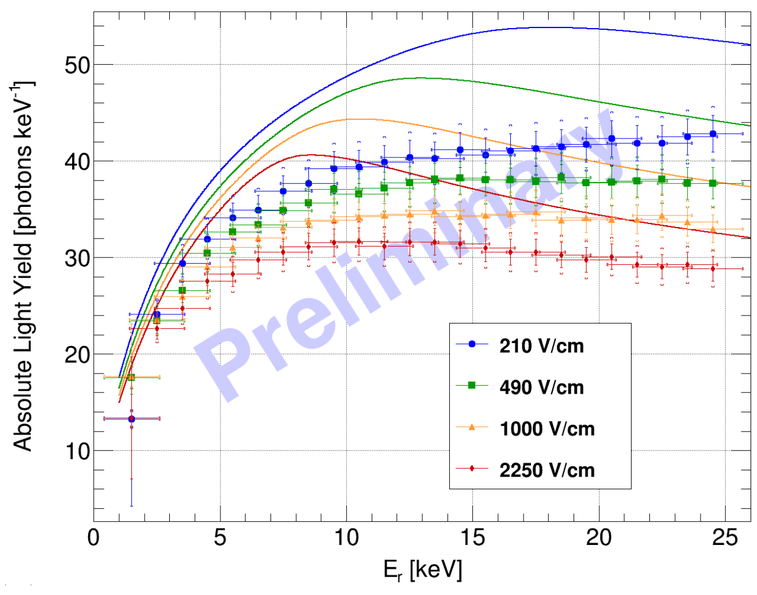

LUX Tritiated-Methane data (TAUP2015)

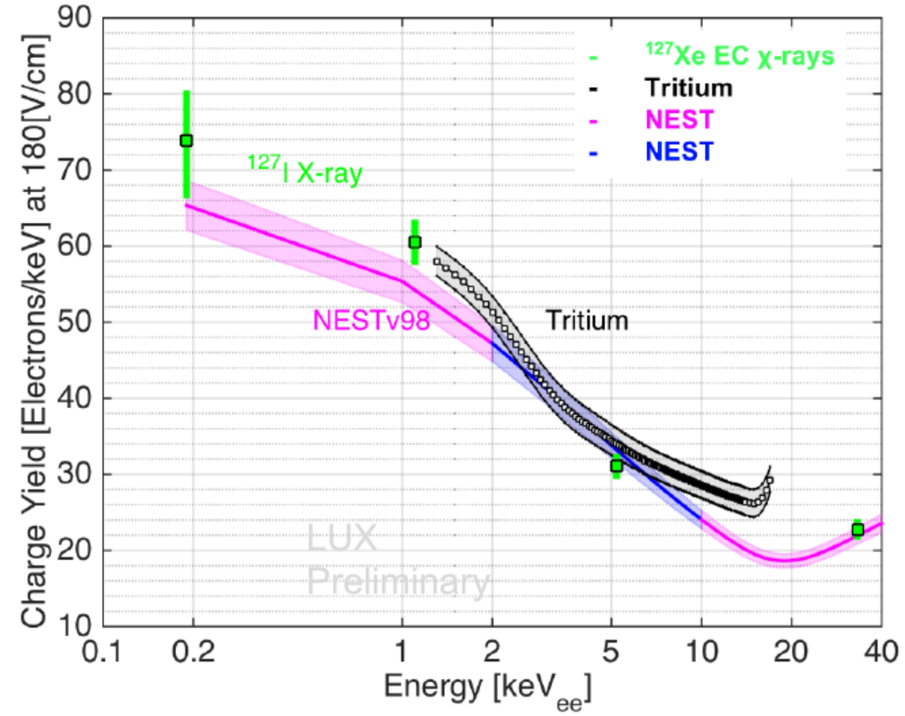

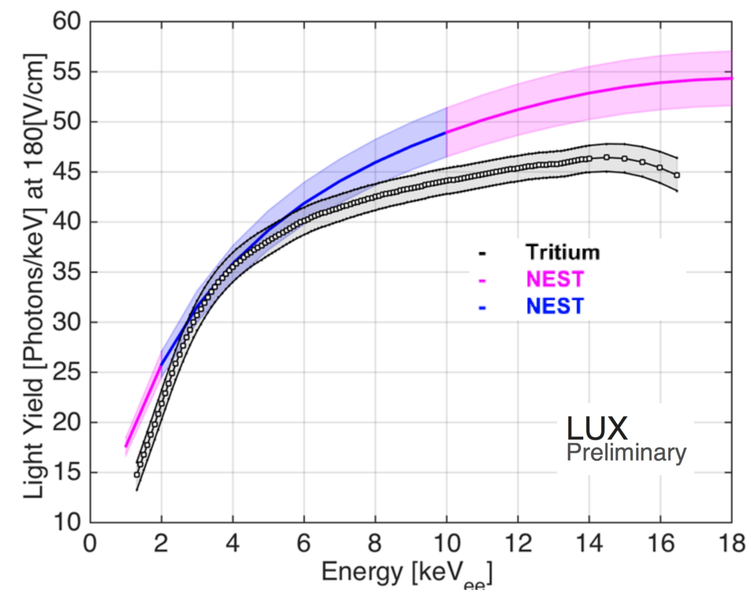

NEST v0.98

Szydagis *et al.*, JINST 6, P1002 (2011)

Recombination

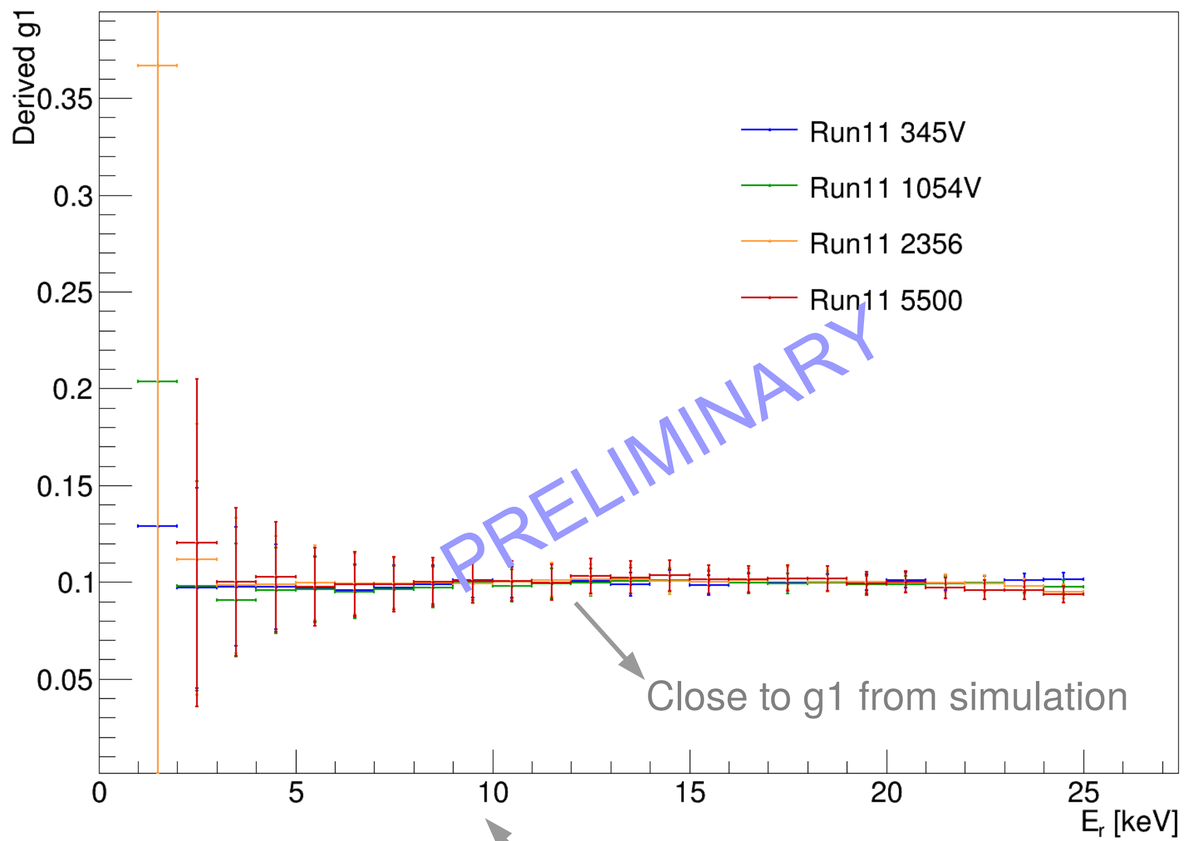

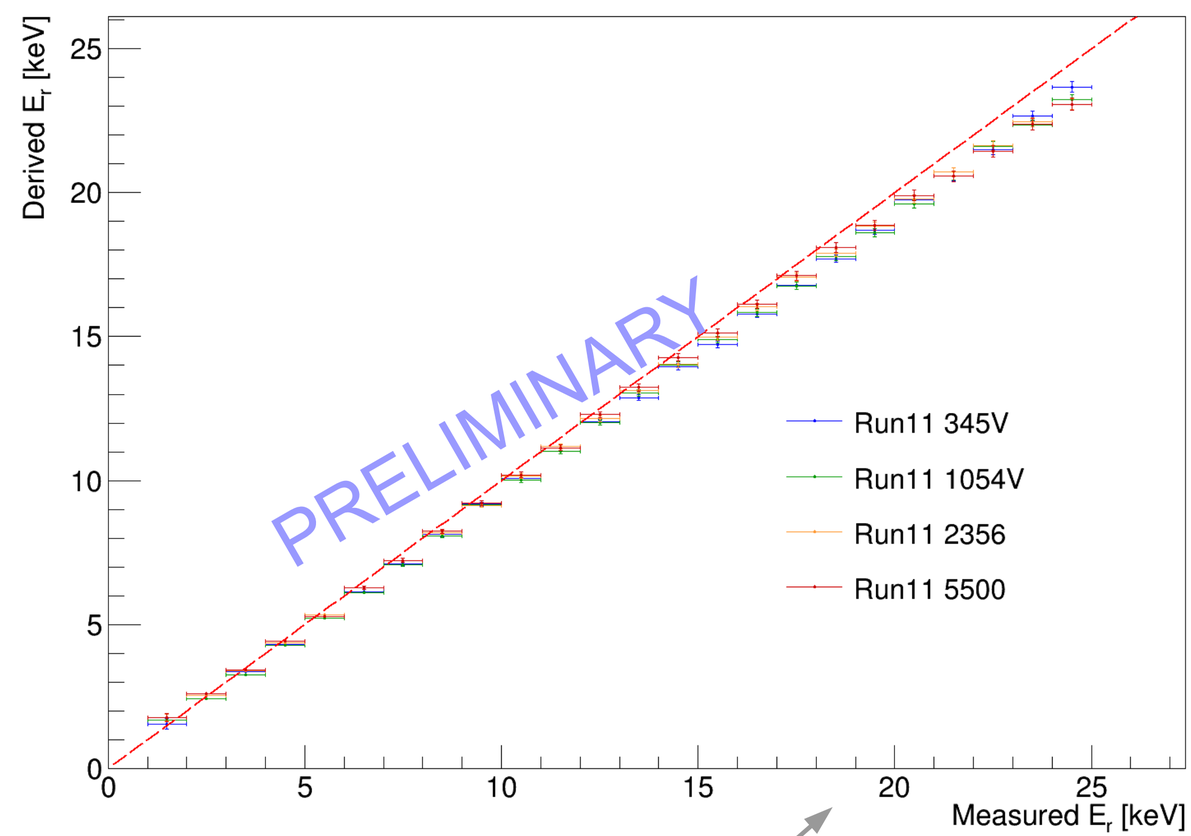

Assume $E_r/W = S1/g1 + S2/g2$

W = 13.7 ± 0.9 eV (taken from NEST paper)

Use W and data to fit for g1

Compute E_r using derived g1

NEST/LUX Comparison

LUX Tritiated-Methane data (TAUP2015)

neriX ER Compton data

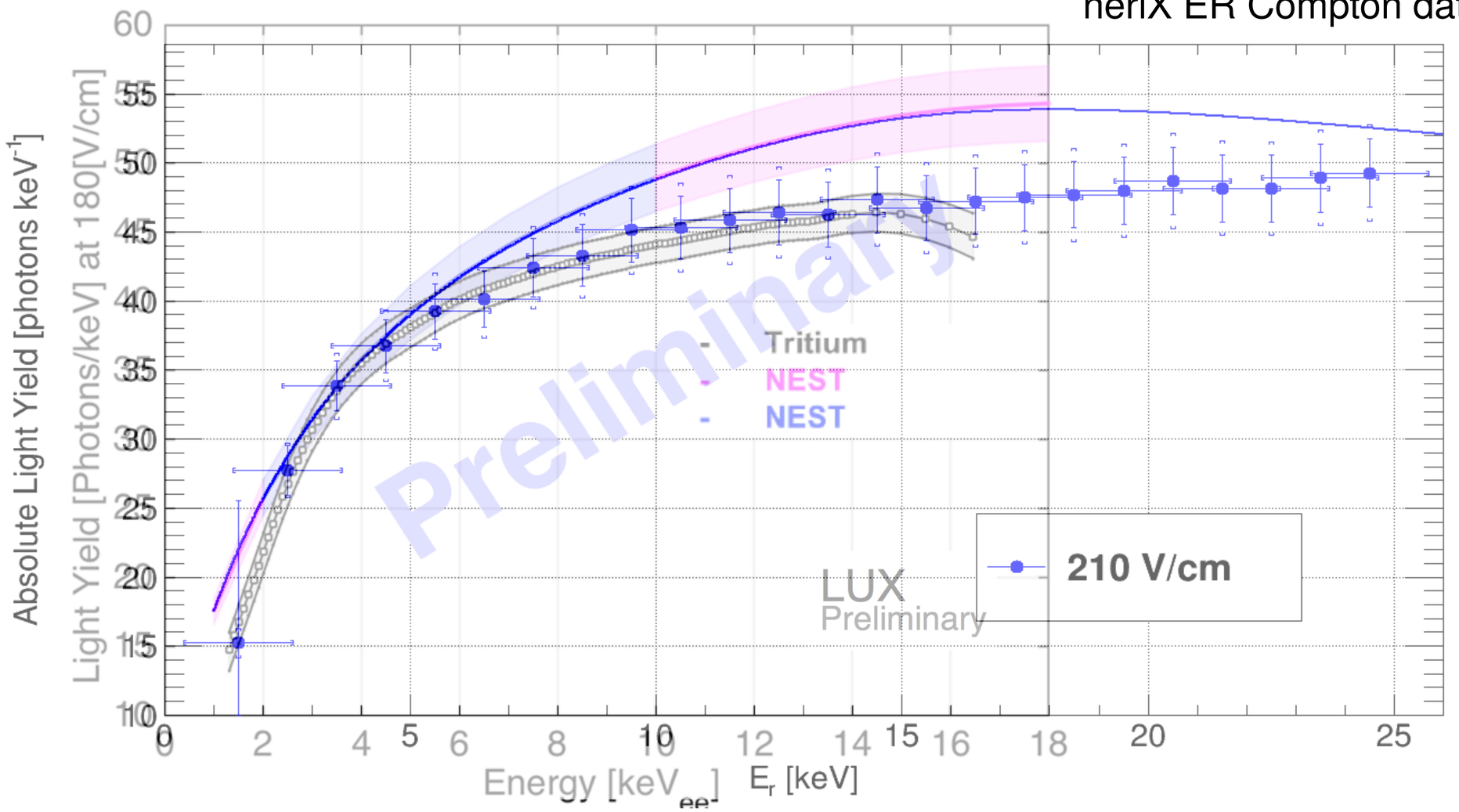

Assuming
g1 ~ 0.1

NB: fields *not* the same
210±15 vs 180±?

NEST v0.98

Szydagis *et al.*, JINST 6, P1002 (2011)

NEST/PIXeY Comparison

NEST v0.98

Szydagis *et al.*, JINST 6, P1002 (2011)

PIXeY ^{22}Na data (LINDINE2015)

neriX ER Compton data

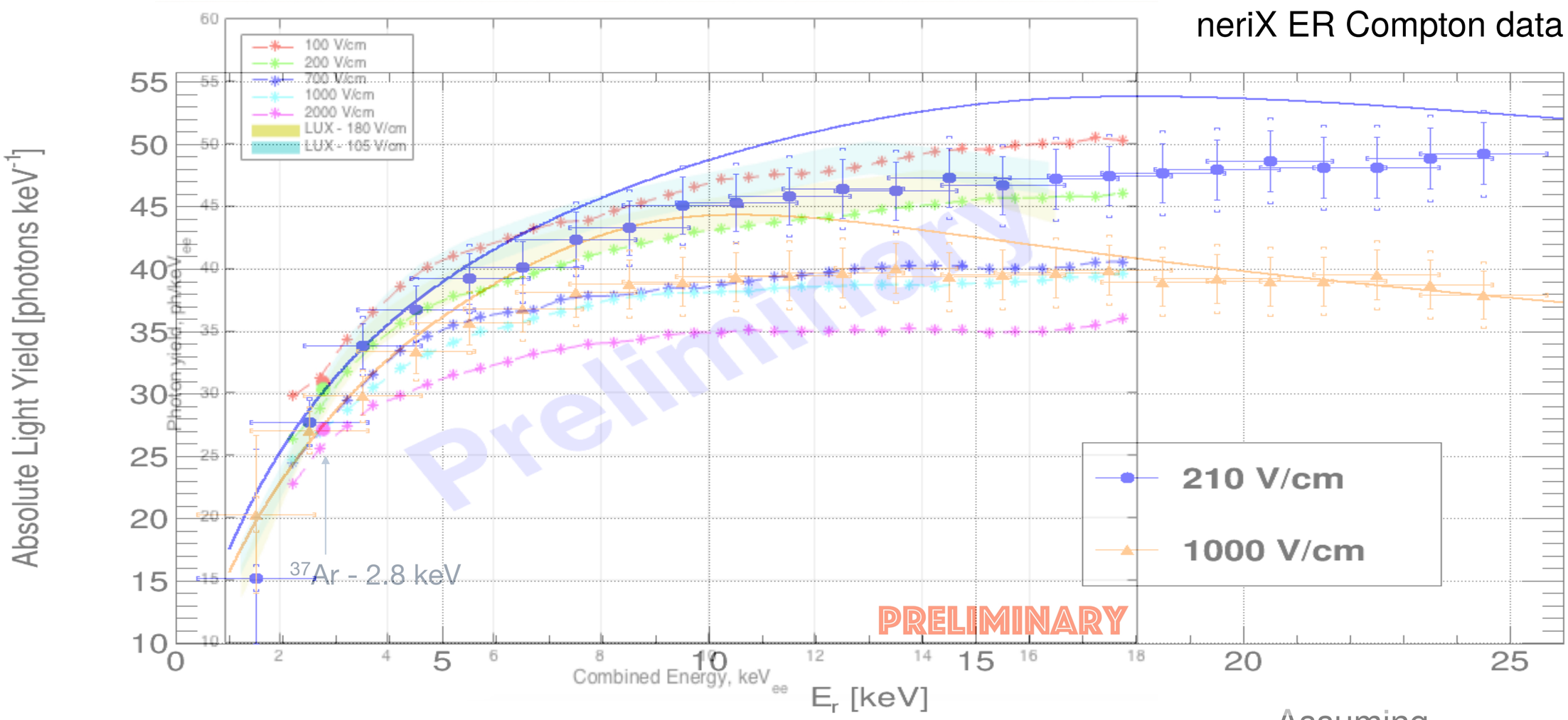

Assuming
g1 ~ 0.1

Systematics

Effects Under Consideration

- PMT gains → direct measurement
- HPGe energy resolution → direct measurement
- Incomplete collection and field non-uniformity near TPC walls → direct measurement
- Energy loss in insensitive areas → MC, direct measurement
- S1 peak-finding efficiency → improved method
- Effect of differential rate variation across bin → MC
- Photon collection efficiency (geometrical limit) → MC

Underestimate yields

Overestimate yields

Not yet incorporated

Next Steps

NR Measurement

- D-D generator
- EJ301 liquid scintillators as secondary detectors → PSD

Same generator as used for: Plante *et al.*, Phys. Rev. C 84, 045805 (2011)

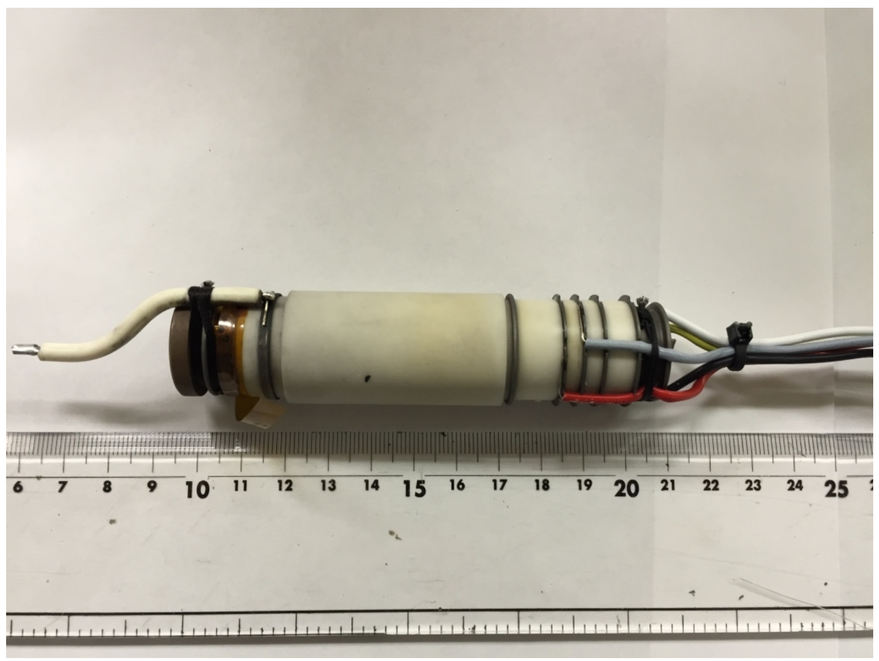

Larger housing
Tested up to 100kV

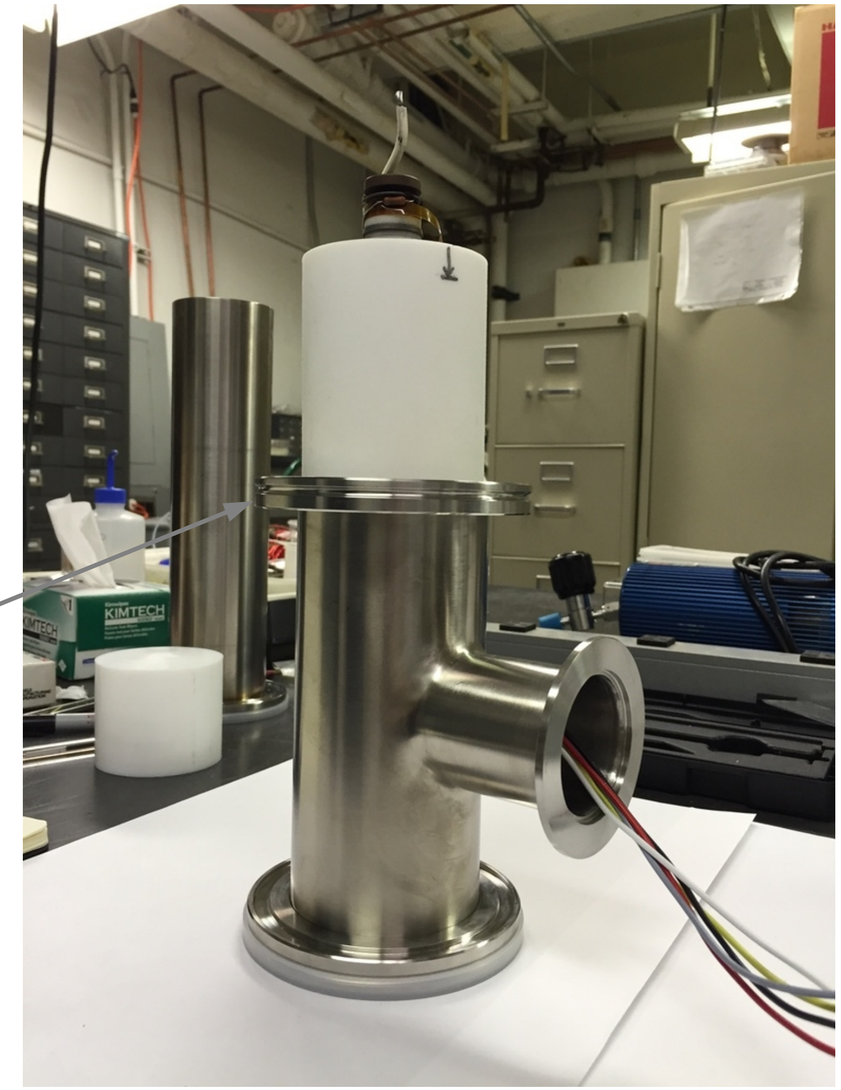

Initial measurements underway!