# CMB Detector Readout

**Adam Anderson**
**10 August 2022**
**KICP CMB Instrumentation Summer School**

# Goals

- Understand five readout circuits:

    1. Single-TES readout
    2. Time-domain multiplexing (TDM, tMUX)
    3. Frequency-domain multiplexing (FDM, fMUX)
    4. Quadrature demodulation for phase readout of KIDs
    5. Microwave multiplexing (uMUX)

# TDM Example

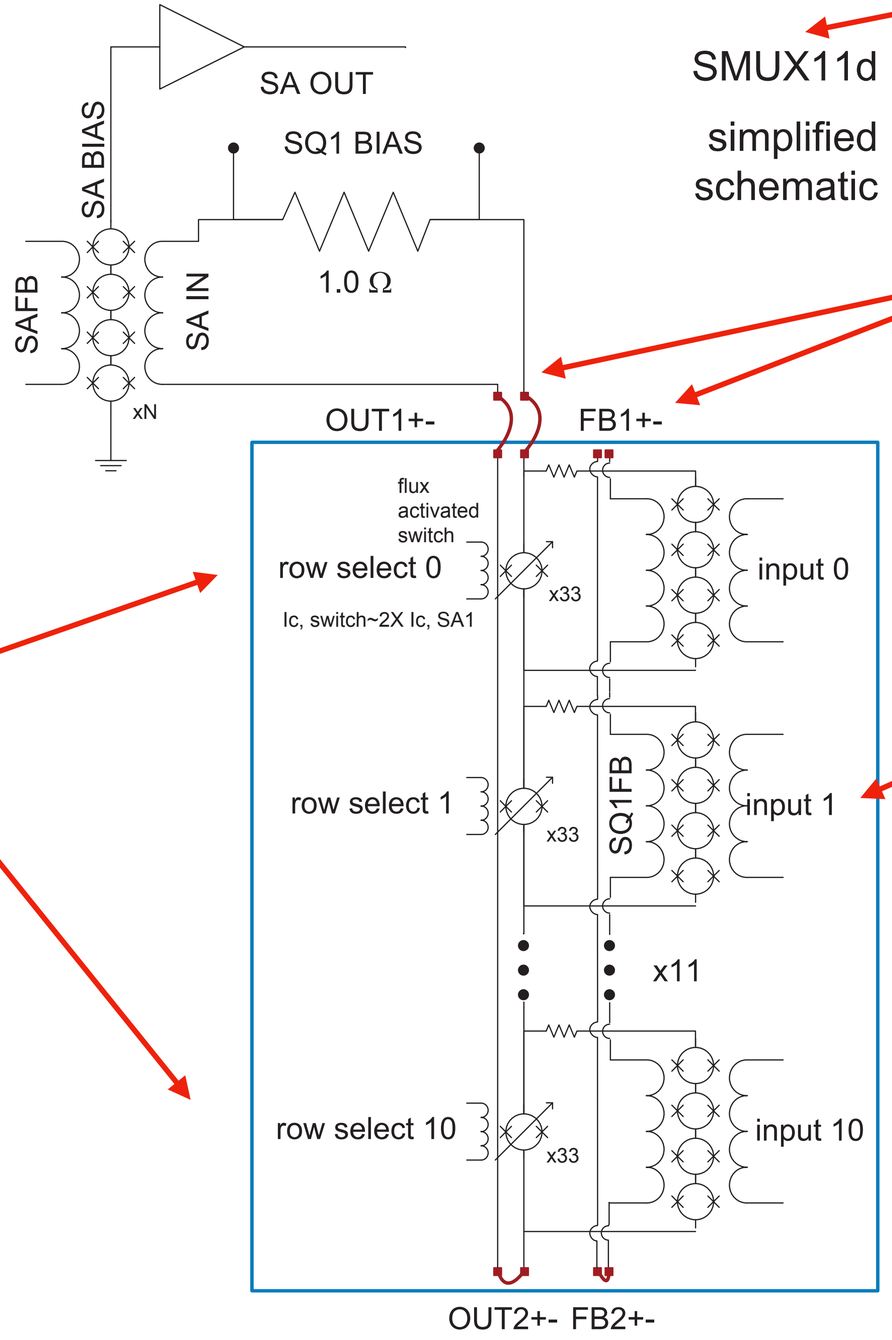


SMUX11d

simplified schematic

"mux11d" - architecture used by BICEP/Keck

Use common SQUID bias and feedback lines for all detectors (i.e. rows) per column

Switch between reading out each row with flux-activated switches (SQUIDs)

Input connects to TES bias circuit

1 column—repeat many times

Figure: Halpern, et al.

# TDM Block Diagram - CMB-S4 Implementation

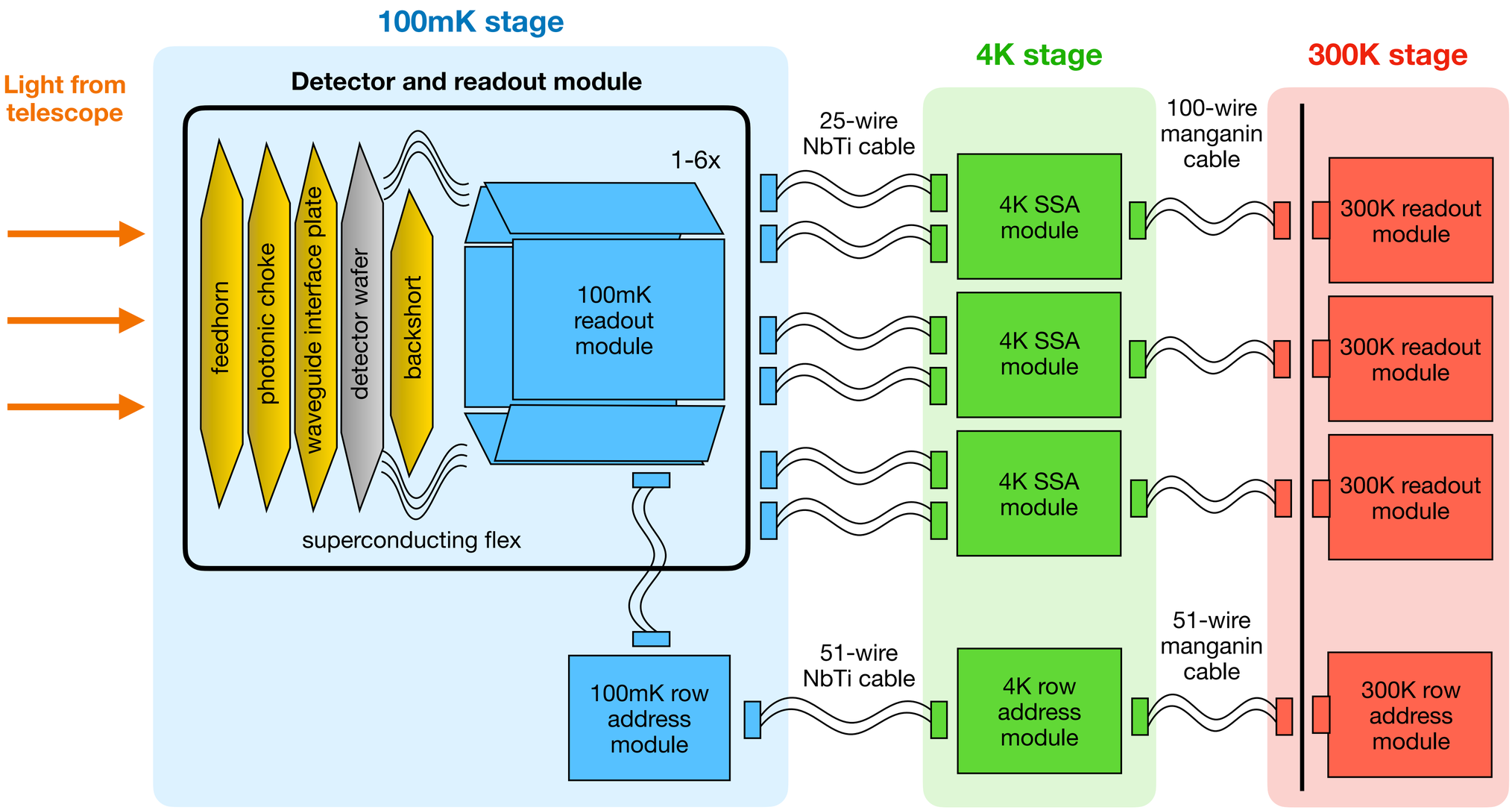


Figure: Barron, et al. (2208.02284)

# TDM Hardware - Various

## 100mK readout

"MUX chips" with SQ1 and flux-activated switches

Shunt resistor chips

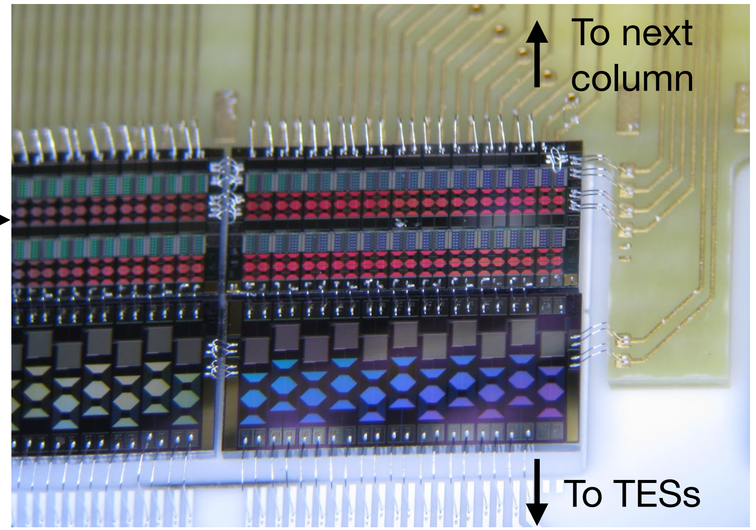


Photo: BICEP, H. Hui

## "Multichannel electronics" (MCE) - legacy 300K readout

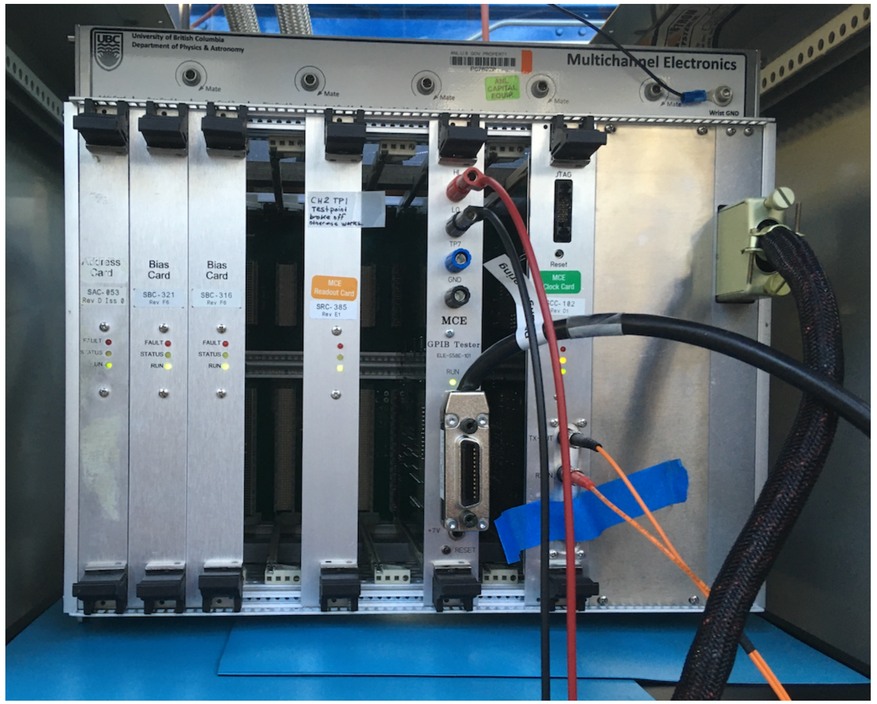


Photo: A. Anderson

## MCE readout cards

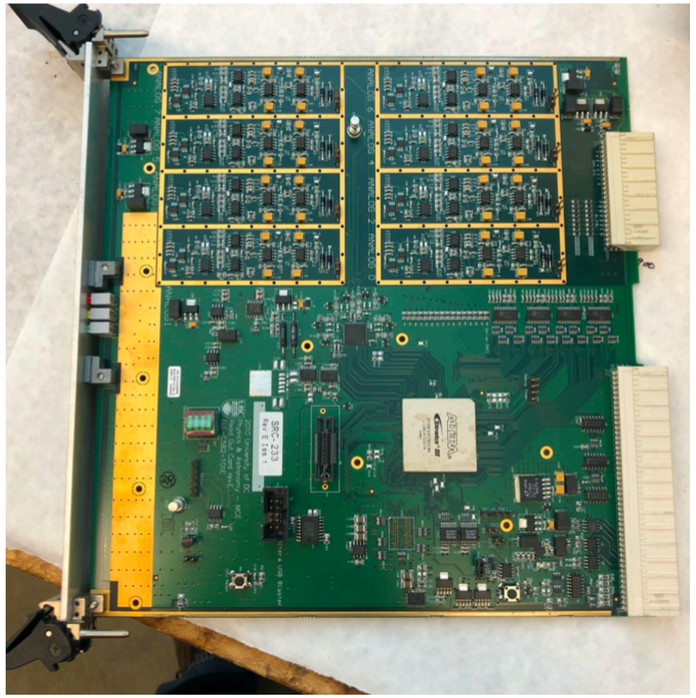

Photo: S. Henderson

## 4K SQUID series arrays (SSA)

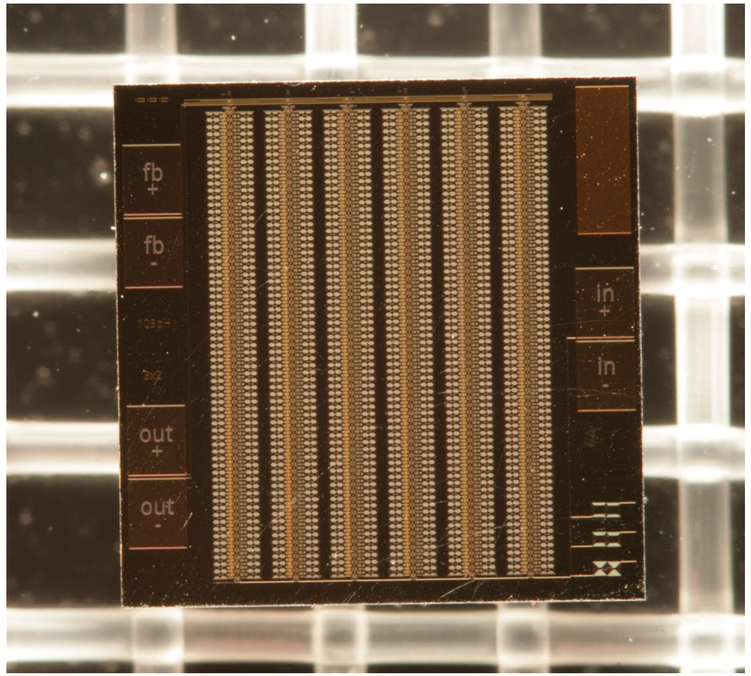


Photo: M. Durkin

# FDM Example

One LC filter per detector to select AC bias frequency

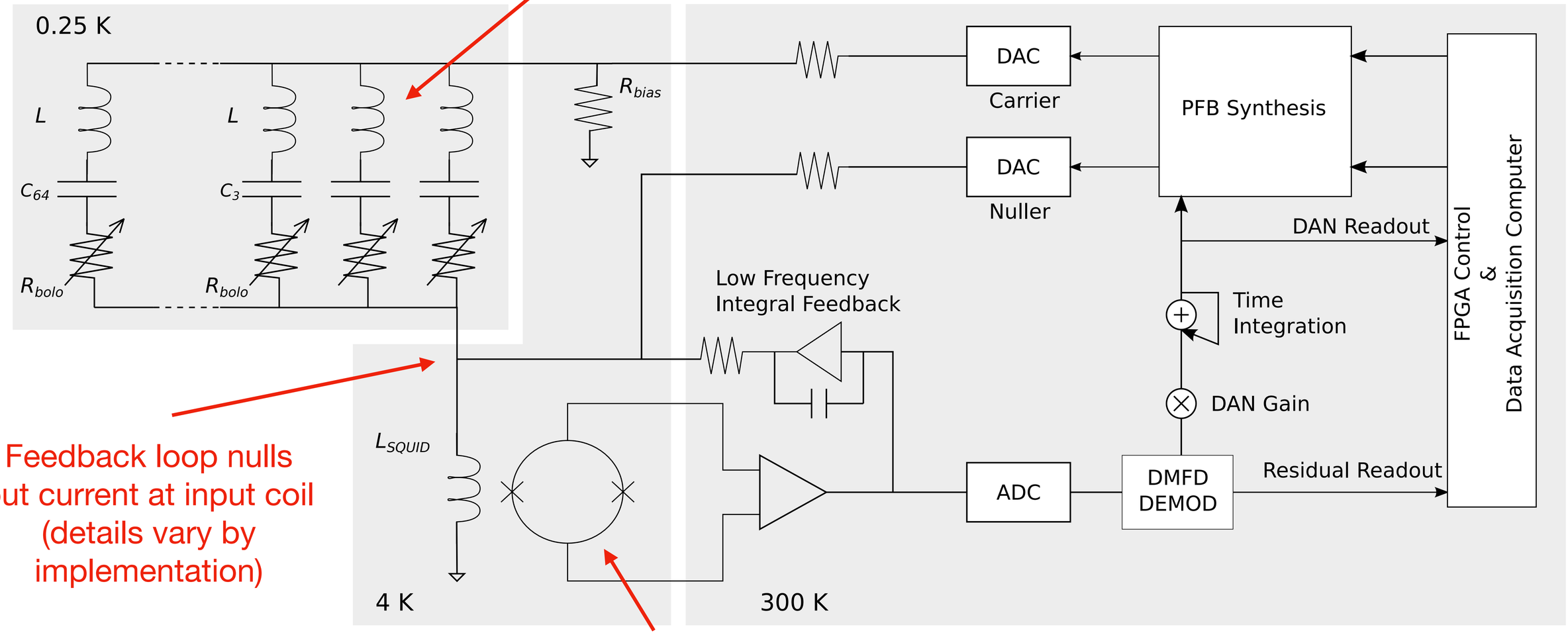


Feedback loop nulls out current at input coil (details vary by implementation)

Single SQUID series array at 4K (varies by implementation)

Figure: Bender, et al. (1407.3161)

# FDM Hardware - SPT-3G Implementation

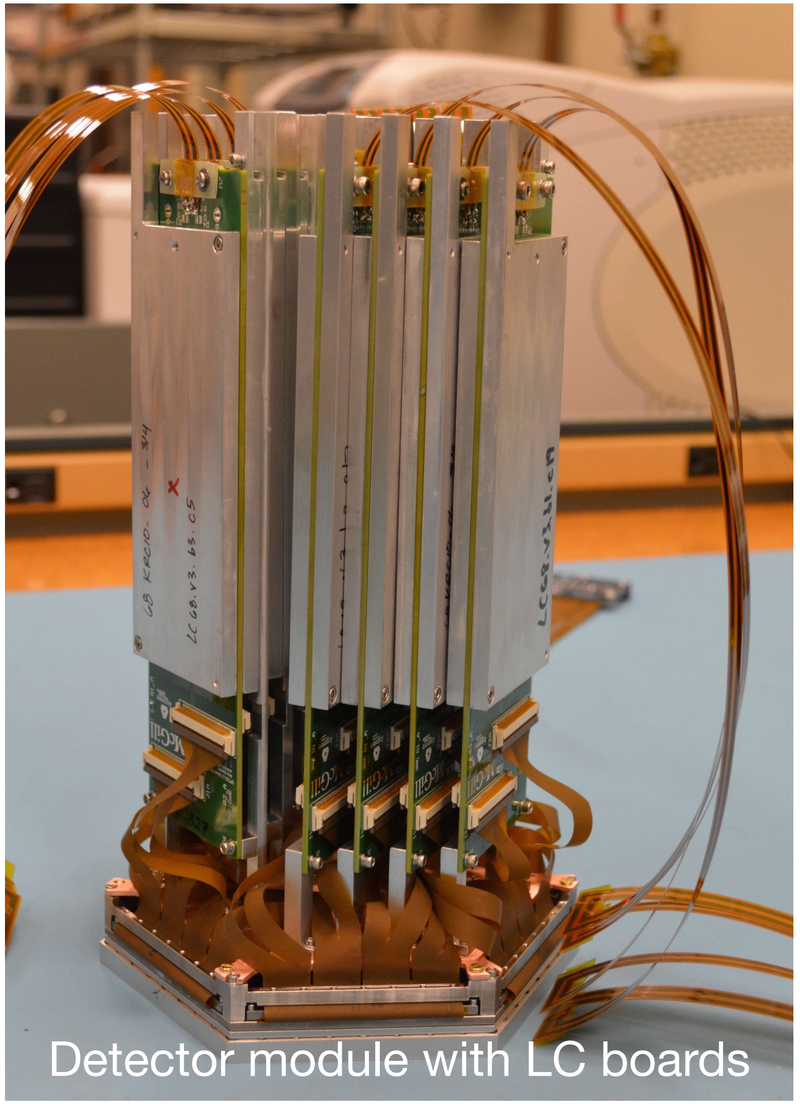


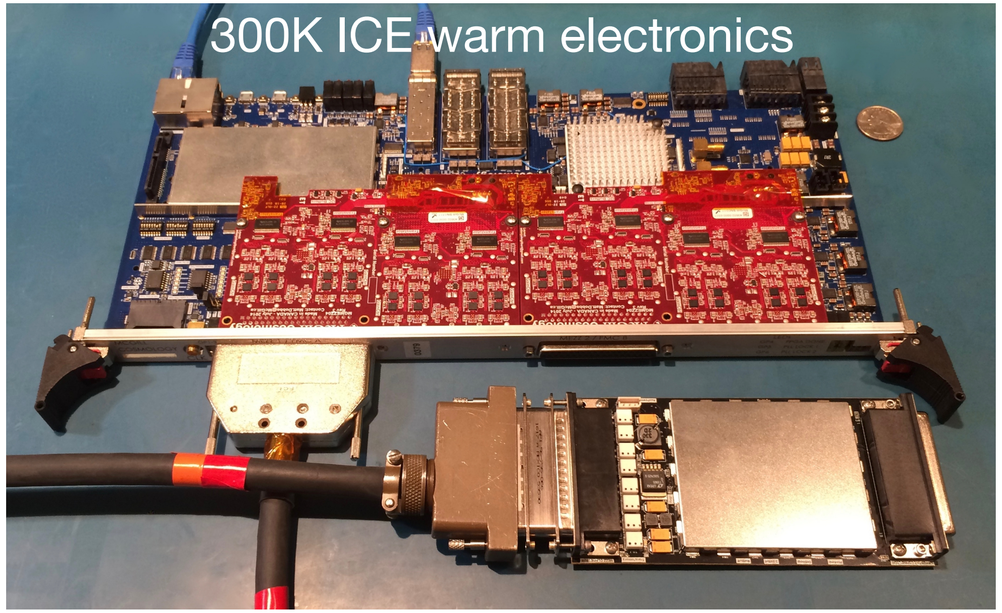


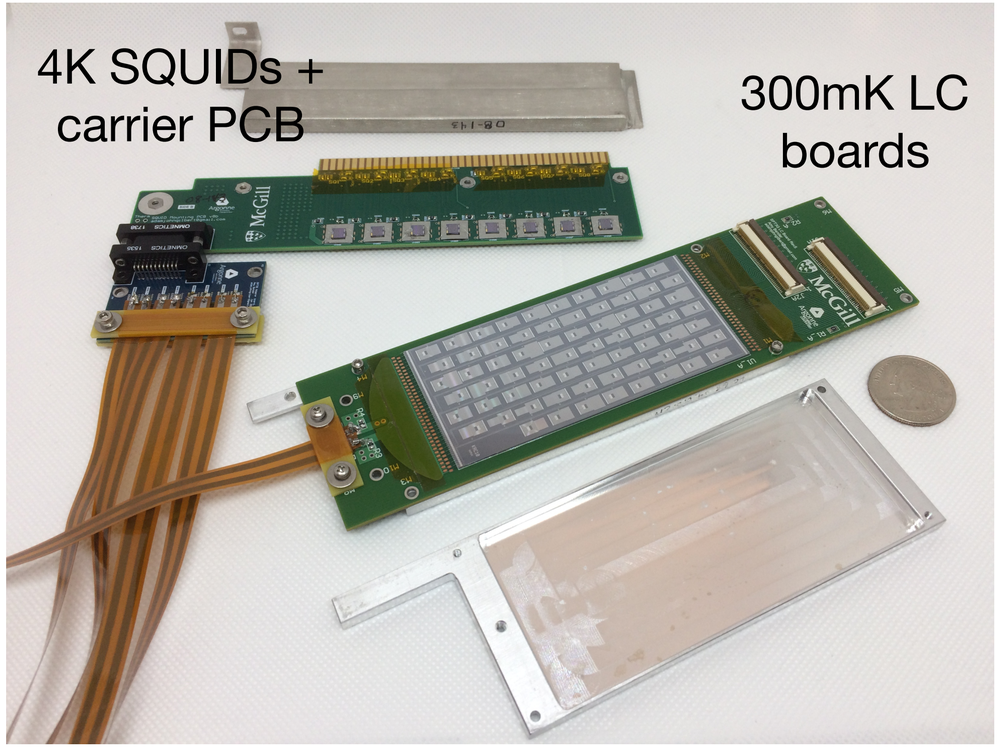


A. Bender, et al. (1907.10947)

# uMUX Example

Continuously read out frequency or phase of resonators, and extract TES signal from the *phase of the time-dependence of the resonant frequencies* under flux-ramp modulation!

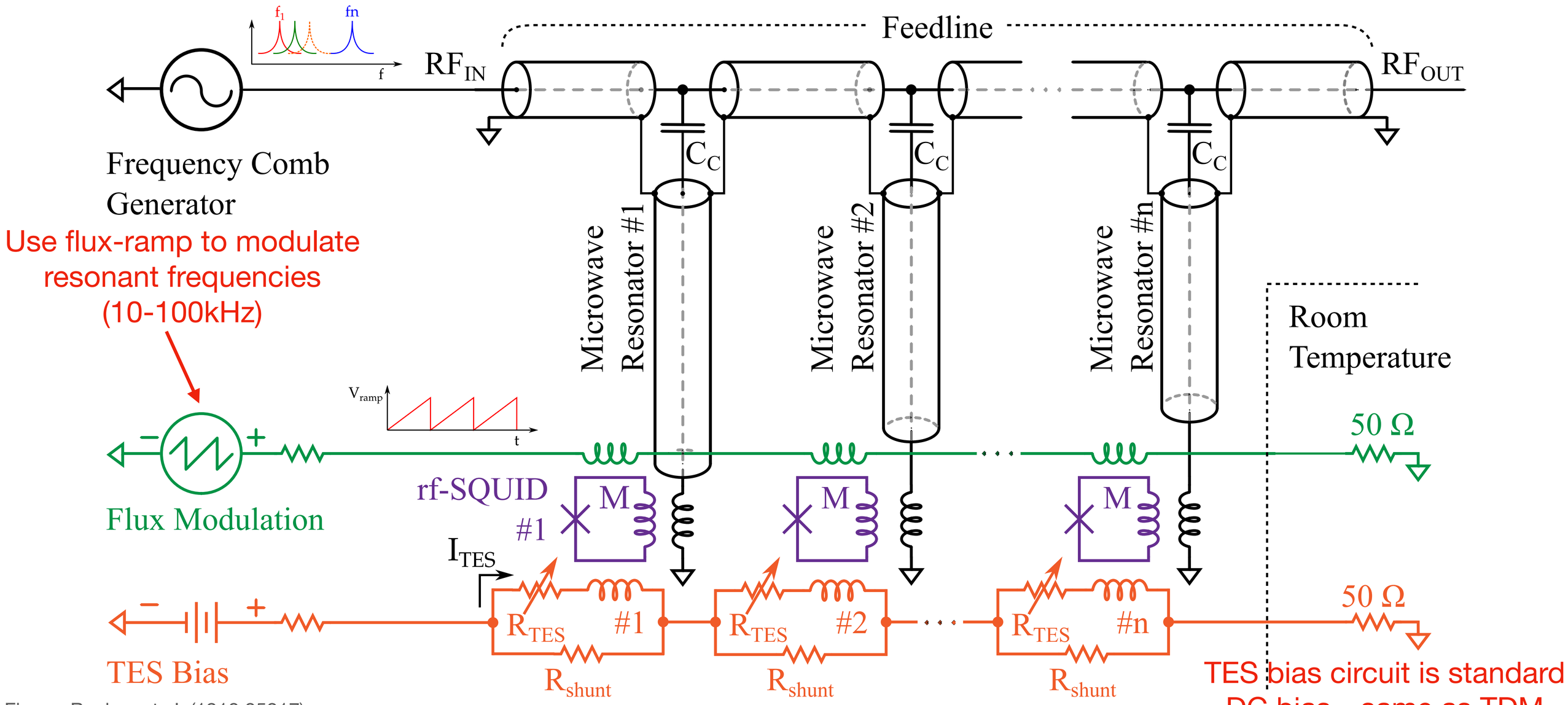


Figure: Becker, et al. (1910.05217)

# TES Current Pulse in Flux-Ramp Modulation

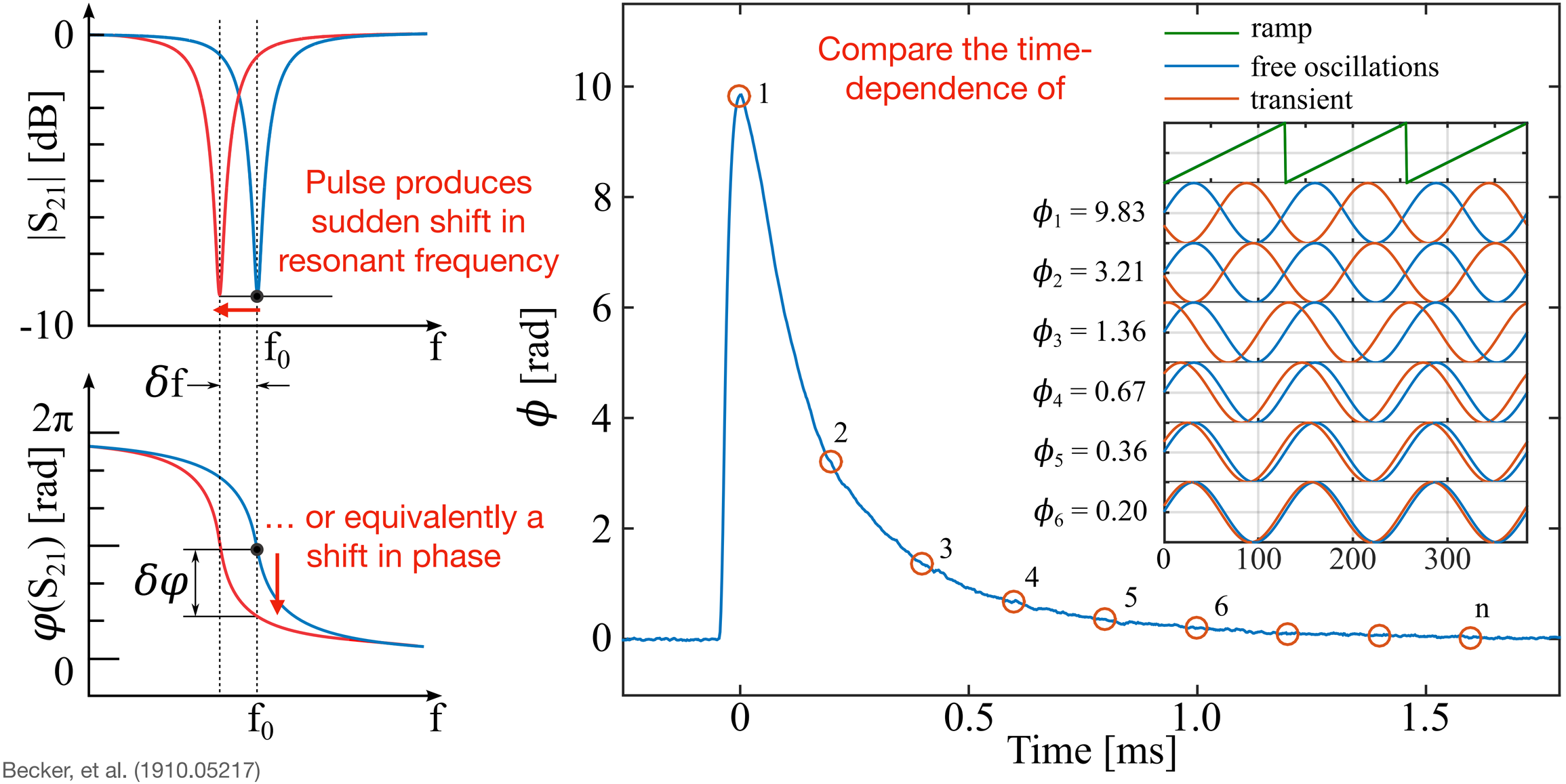


Figure: Becker, et al. (1910.05217)

# uMUX Hardware - SO Implementation

100mK detector/readout module

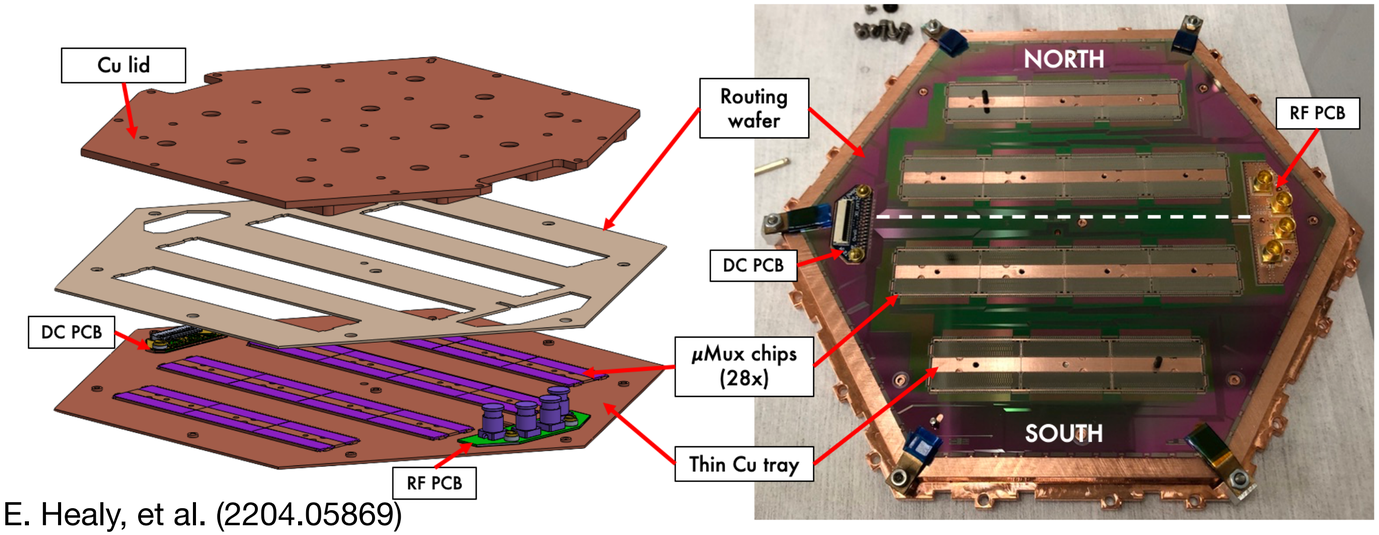


E. Healy, et al. (2204.05869)

4K wiring and low-noise amplifiers

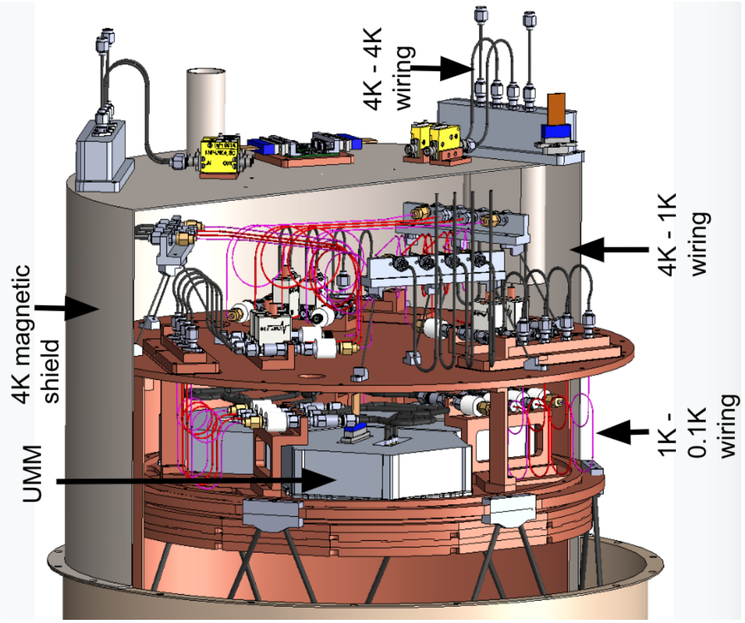


M. Rao, et al. (2003.08949)

300K “SMuRF” electronics

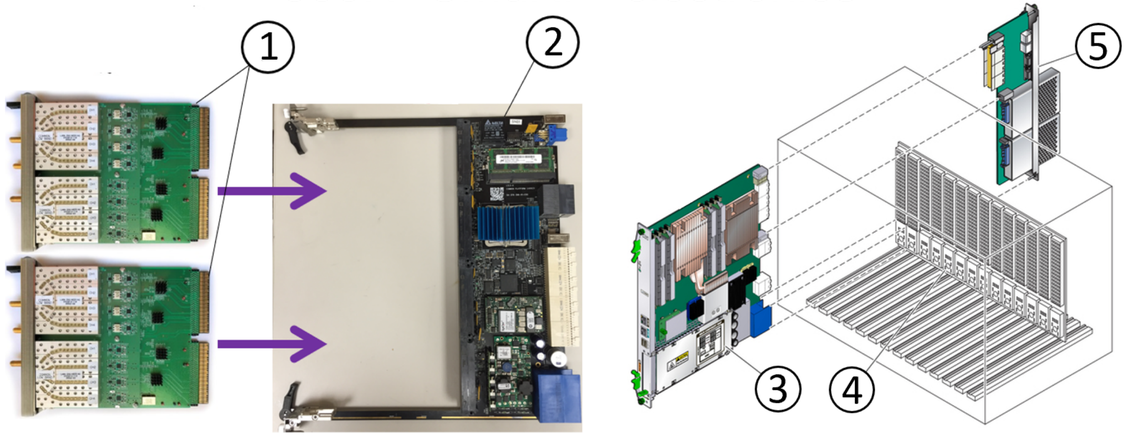


S. Henderson, et al. (1809.03689)

# Useful References


- SQUIDs
  - J. Clarke and A. I. Braginski, The SQUID Handbook: Vol. 1, Fundamentals and Technology of SQUIDs and SQUID Systems. Wiley, (2004).
- Single-TES readout
  - K. D. Irwin and G. Hilton, Transition-Edge Sensors. In: Enss, C. (eds) Cryogenic Particle Detection. Topics in Applied Physics, vol 99. Springer, Berlin, Heidelberg. https://doi.org/10.1007/10933596_3
- TDM architecture
  - K. D. Irwin, et al. Advanced Code-Division Multiplexers for Superconducting Detector Arrays. J Low Temp Phys 167, 588–594 (2012). https://doi.org/10.1007/s10909-012-0586-7
  - W. B. Doriese, et al. Developments in Time-Division Multiplexing of X-ray Transition-Edge Sensors. J Low Temp Phys 184, 389–395 (2016). https://doi.org/10.1007/s10909-015-1373-z
- FDM architecture
  - M. Dobbs, et al., Rev. Sci. Instrum. 83, 073113 (2012); https://doi.org/10.1063/1.4737629 (arXiv:1112.4215)
- uMUX architecture
  - B. Mates, PhD thesis, University of Colorado (2011); https://scholar.colorado.edu/concern/graduate_thesis_or_dissertations/gt54kn14d