CMB Summer School @ UChicago/KICP

ADR Lab - R. Basu Thakur, Q. Tang, N. Kuklev

On Monday you helped closed the ADR cryostat and saw the internals.

This is a follow up on your efforts: the cryostat is now cold and we will take some data

We will plan to cool a detector down to ~100 mK

The detector is “dark” i.e. closed in a box

We will look at S21 transmission curve for this aluminum kinetic inductance detector

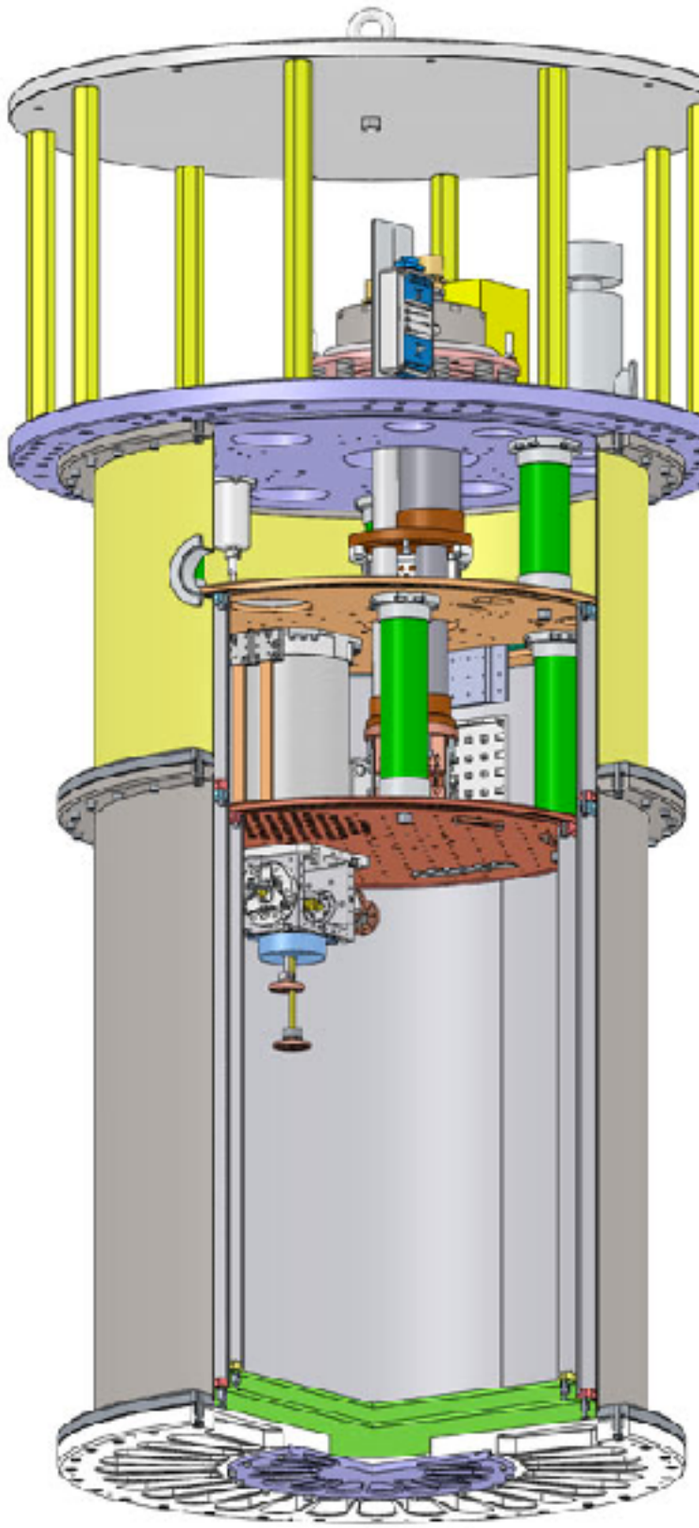

CMB Summer School @ UChicago/KICP

ADR Lab - R. Basu Thakur, Q. Tang, N. Kuklev

$$S = k_B \sum_j p_j \ln p_j, \; p_j \sim \frac{N_{spins-up}}{N_{tot}}$$

$$\frac{dS}{dU} = T^{-1}$$

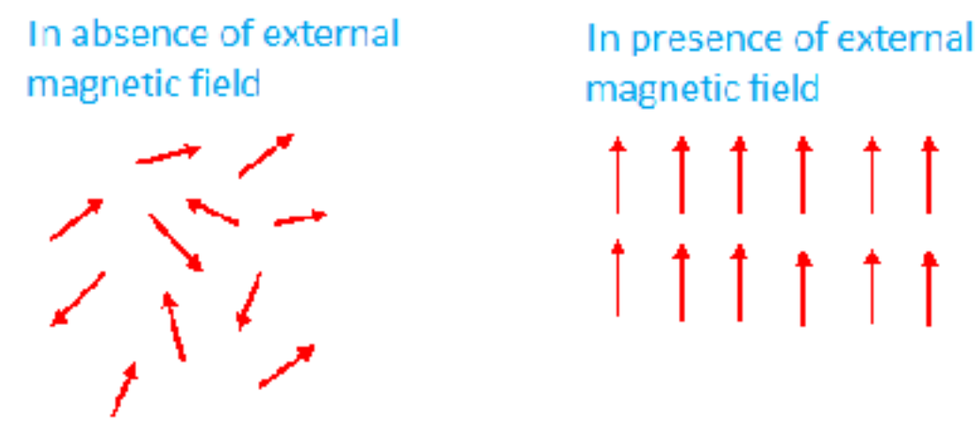

What is an ADR ?

Adiabatic Demagnetization Refrigerator

Two magnetic “salt pills”: ferric ammonium alum (FAA) and gadolinium-gallium garnet (GGG)

FAA goes to 50 mK, GGG goes to 0.1 K.
GGG is like a thermal intercept for the super-cold stuff.

CMB Summer School @ UChicago/KICP

ADR Lab - R. Basu Thakur, Q. Tang, N. Kuklev

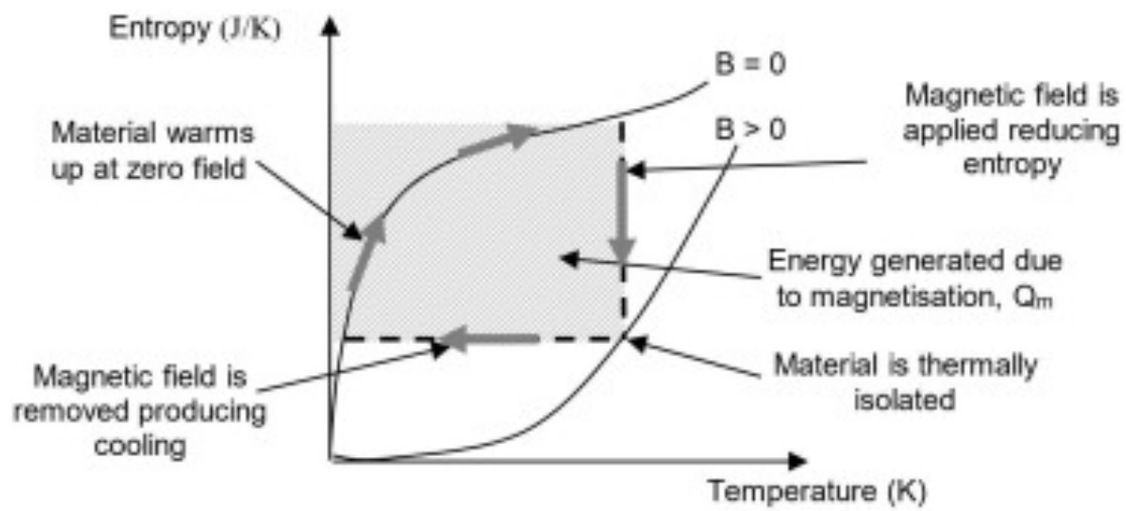

Steps:

0. Everything is at 3K
1. Apply a large B-field (few Tesla): Aligns spins i.e. lowest entropy state
2. Disconnect salt-pills from 3K
3. Ramp-down B-field … 2nd law of thermodynamics kicks in!
4. Spin randomization … drastic drop in physical temperature of salt pills

CMB Summer School @ UChicago/KICP

ADR Lab - R. Basu Thakur, Q. Tang, N. Kuklev

Internals:

Input power reduced to prevent detector loading

output power amplified by HEMT cryo-amp

DC-blocks break direct connections/ prevent noise or spurious power loading

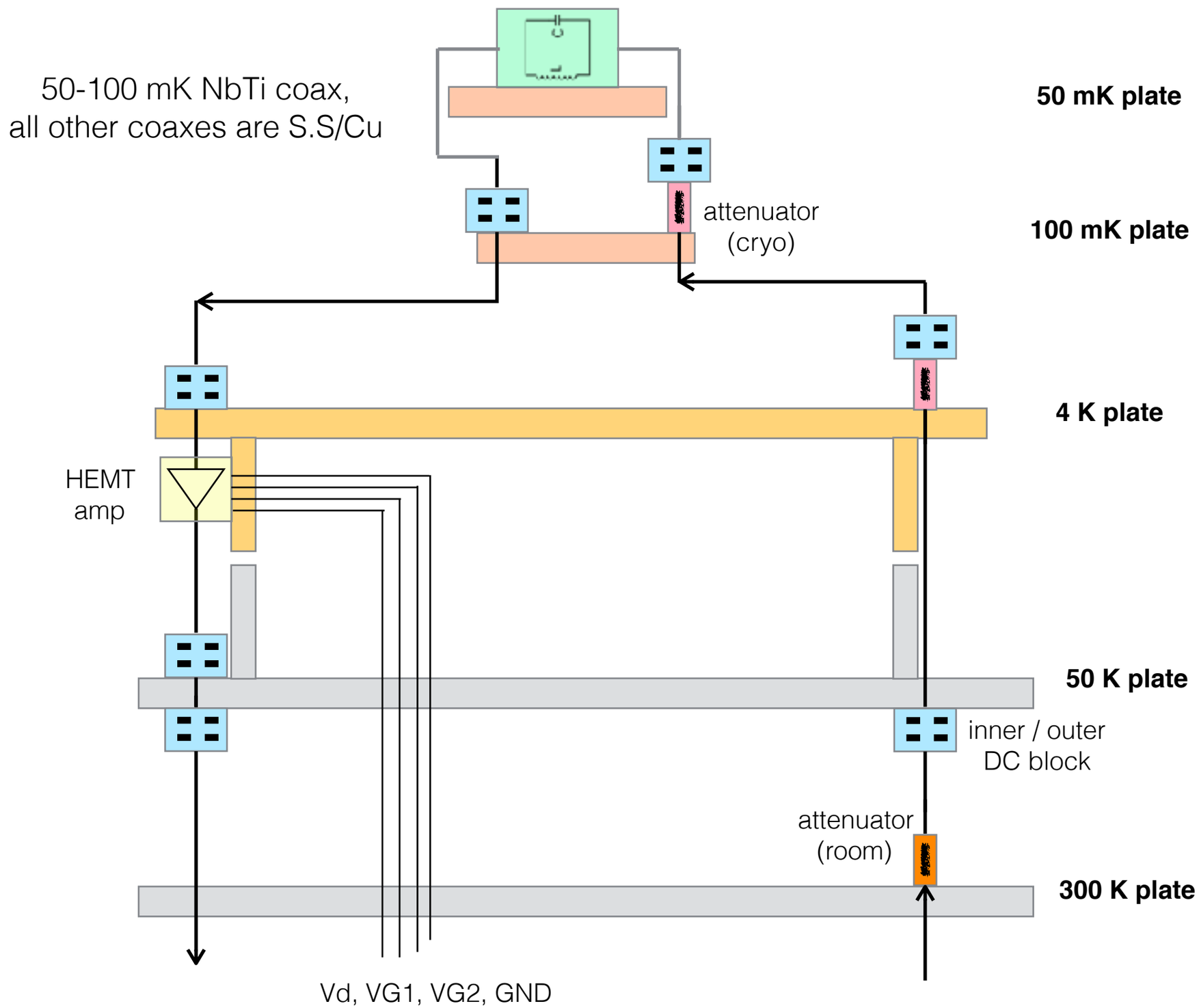

CMB Summer School @ UChicago/KICP

ADR Lab - R. Basu Thakur, Q. Tang, N. Kuklev

We should see a S21 resonance, and see the effect of temperature shift the resonance.